Solid State Technology Association
3103 North 10th Street
Arlington, Virginia 22201
TEL: (703) 907-7560

COMMITTEE LETTER BALLOT

JEDEC CONFIDENTIAL

COMMITTEE: JC-45
ITEM NUMBER: 2260.01G
DATE: 2019-11-05

SUBJECT: Proposed JESD400-5 DDR5 Serial Presence Detect (SPD) Contents

BACKGROUND: Developed by the SPD Task Group.

KEYWORDS: DDR5 Serial Presence Detect SPD

SPONSOR:
Bill Gervasi
Nantero
bilge@nantero.com

ORIGINATOR:
Bill Gervasi
Nantero
bilge@nantero.com

© JEDEC 2011

PROPOSED

JEDEC STANDARD

DDR5 Serial Presence Detect (SPD) Contents

JESD400-5

Revision 0.89
January 2020

JEDEC SOLID STATE TECHNOLOGY ASSOCIATION

NOTICE

JEDEC standards and publications contain material that has been prepared, reviewed, and approved through the JEDEC Board of Directors level and subsequently reviewed and approved by the JEDEC legal counsel.

JEDEC standards and publications are designed to serve the public interest through eliminating misunderstandings between manufacturers and purchasers, facilitating interchangeability and improvement of products, and assisting the purchaser in selecting and obtaining with minimum delay the proper product for use by those other than JEDEC members, whether the standard is to be used either domestically or internationally.

JEDEC standards and publications are adopted without regard to whether or not their adoption may involve patents or articles, materials, or processes. By such action JEDEC does not assume any liability to any patent owner, nor does it assume any obligation whatever to parties adopting the JEDEC standards or publications.

The information included in JEDEC standards and publications represents a sound approach to product specification and application, principally from the solid state device manufacturer viewpoint. Within the JEDEC organization there are procedures whereby a JEDEC standard or publication may be further processed and ultimately become an ANSI standard.

No claims to be in conformance with this standard may be made unless all requirements stated in the standard are met.

Inquiries, comments, and suggestions relative to the content of this JEDEC standard or publication should be addressed to JEDEC at the address below, or refer to www.jedec.org under Standards and Documents for alternative contact information.

Published by
©JEDEC Solid State Technology Association 2016 3103
North 10th Street
Suite 240 South
Arlington, VA 22201-2107

This document may be downloaded free of charge; however JEDEC retains the copyright on this material. By downloading this file the individual agrees not to charge for or resell the resulting material.

PRICE: Contact JEDEC

Printed in the U.S.A.
All rights reserved

PROPOSED

PROPOSED

PLEASE!

DON'T VIOLATE
THE
LAW!

This document is copyrighted by JEDEC and may not be reproduced
without permission.

For information, contact:

JEDEC Solid State Technology Association 3103
North 10th Street
Suite 240 South
Arlington, VA 22201-2107

or refer to www.jedec.org under Standards-Documents/Copyright Information.

REVISION HISTORY

Revision	Author	Date	Status and Description
Rev0.1	B.Gervasi	05/25/17	DDR5 Initial Format Rev0.1, Changed all timing values to 16-bit values with fixed time-base, Removed references to LPDDR5
Rev0.7	C.Cox	2/28/18	Update to file, moved to book format. Removed DRAM parametric values that were static in the DRAM specification. With the adoption of 1024B SPD size, content locations and areas were move to allow co-location of block regions. Since the module definitions are still not solidified in the module TG, the Module Appendix are being moved to independent files in the books system, allowing them to be balloted later as their specs are defined. The full draft spec will not be published until at least the first draft of the core appendixes are completed (UDIMM, RDIMM, LRDIMM and likely NVDIMM).
Rev 0.8	B. Gervasi	10/30/18	Moved all examples to a separate page derived from the master spreadsheet. Added bytes for VDD, VDDQ, VPP. Deleted tRCD, tCCD, tFAW. Assert that NVDIMM will be its own module type instead of overlay as in DDR4. Expanded Manufacturing Part Number to 30 bytes.
Rev 0.8 ballot comments	B. Gervasi	11/8/18	Added RFU blocks and renumbered all bytes accordingly. Repaired many errors in module annexes.
Rev 0.81	B. Gervasi	2/21/19	Added PMIC bytes to all annexes
Rev 0.82	B. Gervasi	4/9/19	Corrected per ballot comments: pointer to revision byte, module thickness
Rev 0.86	B. Gervasi	10/28/19	Moved thermal byte to DIMM common annex Cleaned up symmetrical/asymmetrical DIMM diagrams Added module calculation Removed duplicated I/O width parameter Added temperature grades per JESD402-1 Corrected typo in byte 6, 8
Rev 0.87	B. Gervasi	10/29/19	Removed redundant wording, cleaned up capacity calculation to match byte content names
Rev 0.88	B. Gervasi	10/29/19	Corrected thermal byte typo Renamed Primary and Secondary SDRAMs as First and Second Cleaned up color coding in examples section
Rev 0.89	B. Gervasi	1/20/20	Removed DDP Cleaned up first/second DRAM references
Rev 0.90	B. Gervasi	1/21/20	Changed rounding algorithm to match JC42.3
Rev 0.90a	B. Gervasi	1/27/20	Changed coding for die per package for consistency to old coding Updated examples per new spreadsheet
Rev 0.90b	B. Gervasi	1/28/20	Reconciled UDIMM and RDIMM module types between byte 3, base configuration, and annexes, corrected some copy and paste errors in timing examples section

Document Formating Legend

Colors used in this Document and what they mean:

RED - All Red text is defined as something that is NEW

BLACK - Is considered the standard or the current Ballot.

LIGHT GREY - All Light Grey text is defined as something that should be considered TBD. The content may be accurate or the same as previous technologies but has not yet been reviewed or determined to be the working assumption.

0.1 Introduction 1
0.2 History 1
0.3 SPD Architecture 2
0.4 Overlay Schema 3
0.4.1 Solder Down Overlay Schema 3
0.4.2 UDIMM Overlay Schema 3
0.4.3 RDIMM Overlay Schema 4
0.4.4 LRDIMM Overlay Schema 4
0.4.5 DDIMM Overlay Schema 4
0.4.6 NVDIMM-N Overlay Schema 5
0.4.7 NVDIMM-P Overlay Schema 5
0.5 Parsing the SPD 7
0.6 SPD Revision Progression 9
0.7 Address map 10
0.8 Details of each byte 1
0.8.1 Blocks 0 & 1: General Configuration Section: Bytes 0~127 (0x000~0x07F) 1
0.9 Example SPD Codes 21
0.10 Blocks 3~6: Module-Specific Section: Bytes 192~447 (0x0C0~0x1BF) 1
0.11 Blocks 8~9: Module Supplier’s Data: Bytes 512~639 (0x200~0x27F) 1
0.12 Blocks 10~15: End User Programmable, Bytes 640~1023 (0x280~0x3FF) 1
0.13 Blocks 8~9: Manufacturing Information: (Bytes 512~639, 0x200~0x27F) 1
0.14 Blocks 10~15: End User Programmable, Bytes 640~1023 (0x280~0x3FF) 1

PROPOSED

Serial Presence Detect (SPD) for DDR5 SDRAM Modules

DDR5 SPD Document Release 0.90b

1.0 Introduction

This annex describes the serial presence detect (SPD) values for all DDR5 memory modules. In this context, “modules” applies to memory modules like traditional Dual In-line Memory Modules (DIMMs) or solder-down motherboard applications. The SPD data provides critical information about all modules on the memory channel and is intended to be use by the system's BIOS in order to properly initialize and optimize the system memory channels. The storage capacity of the SPD non-volatile memory is limited, so a number of techniques are employed to optimize the use of these bytes, including overlays and run length limited coding.

All unused entries will be coded as 0x00. All unused bits in defined bytes will be coded as 0 except where noted.

Timing parameters in the SPD represent the operation of the module including all DRAMs and support devices at the lowest supported supply voltages (see SPD bytes 16 through 18), and are valid from t_{CKAVG}min to t_{CKAVG}max (see SPD bytes 20 through 23).

To allow for maximum flexibility as devices evolve, SPD fields described in this document may support device configuration and timing options that are not included in the JEDEC DDR5 SDRAM data sheet (JESD79-5). Please refer to DRAM supplier data sheets or JESD79-5 to determine the compatibility of components.

2.0 History

Computer main memory buses have traditionally been defined by the generation of memory attached to the bus, e.g., EDO, SDRAM, DDR1, etc. The bus interface protocol and characteristics have largely been defined by the memory type. Clock frequency, CAS latencies, refresh recovery times and similar parameters defined the timing of signals between memory controller and the memory, and parameters such as number of ranks installed and device widths allowed system software to determine the memory capacity and similar high level characteristics of each module.

Over time, the memory bus has been extended to include additional features for application specific requirements. Registered DIMMs, for example, increased total capacity by buffering the loading of the address bus signals, allowing more DRAM to be installed. Similarly, Load Reduced DIMMs buffered the data bus as well, allowing even more ranks of memory to be supported. As each new extension to the function of the memory bus was introduced, system software combined knowledge of those extensions with information programmed into the non-volatile memory in the SPD to determine how to use and optimize the new features. Using the RDIMM as an example, systems understood than an additional clock of latency needed to be added to the DRAM latency to accommodate propagation delay through the register.

In later generations, the DRAM to host interface is completely virtualized. A memory module may have no DRAM at all, yet may use the DRAM bus to communicate with the host by emulating the

DRAM channel interface. These virtual interfaces must appear to the system as one of the base module types, i.e., UDIMM, RDIMM, LRDIMM, or DDIMM. Modules that incorporate at least one non-DRAM media type for the purpose of main memory data storage are called “hybrid”, they act like a DRAM but on the other side of the interface protocol are some other memory type(s).

3.0 SPD Architecture

The SPD contents architecture must support the many variations of module types while remaining efficient. A system of overlay information selected through the use of “key bytes”, or selectors for the type of information to load has been implemented. The following DDR5 module SPD address map describes where the individual lookup table entries will be held in the serial non-volatile memory.

Consistent with the definition of DDR5 generation SPD devices (SPD5108 and SPD5118) which have 16 individual write protection blocks of 64 bytes in length each, the SPD contents are aligned with these blocks as follows:

Block	Range		Description
0	0~63	0x000~0x03F	Base Configuration and DRAM Parameters
1	64~127	0x040~0x07F	Base Configuration and DRAM Parameters
2	128~191	0x080~0x0BF	Reserved for future use
3	192~255	0x0C0~0x0FF	Standard Module Parameters -- See annexes N.1.x for details
4	256~319	0x100~0x13F	Standard Module Parameters -- See annexes N.1.x for details
5	320~383	0x140~0x17F	Standard Module Parameters -- See annexes N.1.x for details
6	384~447	0x180~0x1BF	Standard Module Parameters -- See annexes N.1.x for details
7	448~511	0x1C0~0x1FF	Reserved for future use
8	512~575	0x200~0x23F	Manufacturing information
9	576~639	0x240~0x27F	Manufacturing information
10	640~703	0x280~0x2BF	End User Programmable
11	704~767	0x2C0~0x2FF	End User Programmable
12	768~831	0x300~0x33F	End User Programmable
13	832~895	0x340~0x37F	End User Programmable
14	896~959	0x380~0x3BF	End User Programmable
15	960~1023	0x3C0~0x3FF	End User Programmable

Operating parameters for the different module types are defined in the following Annexes and will reside in the appropriate address ranges of the SPD address map depending on the module type. Please see Overlay Schema for further detail.

1. Annex A.0: Common SPD Bytes for All Module Types
    - Annex A.1: Solder down memory applications
    - Annex A.2: UDIMMs
    - Annex A.3: RDIMM
    - Annex A.4: LRDIMM
    - Annex A.5: DDIMM
    - Annex A.6: NVDIMM-N

PROPOSED

- Annex A.7: NVDIMM-P

4.0 Overlay Schema

The following Schema exemplify the manner in which the base configuration information along with the Annexes are to be overlaid onto the appropriate address spaces in order to provide a complete definition of the module.

4.1 Solder Down Overlay Schema

Key Byte 3 contains any of the following values:

- 0x0B, Solder Down

Block	Range		Description
0	0~63	0x000~0x03F	Base Configuration and DRAM Parameters
1	64~127	0x040~0x07F	Base Configuration and DRAM Parameters
2	128~191	0x080~0x0BF	...
3	192~255	0x0C0~0x0FF	**Insert Annex A.1: Solder Down**
4	256~319	0x100~0x13F	**Insert Annex A.1: Solder Down**
5	320~383	0x140~0x17F	**Insert Annex A.1: Solder Down**
6	384~447	0x180~0x1BF	**Insert Annex A.1: Solder Down**
7~15	448~1023	0x180~0x3FF	...

4.2 UDIMM Overlay Schema

Key Byte 2 contains value 0x12 (DDR5)
Key Byte 3 contains any of the following values:

- 0x02, UDIMM
- 0x03, SO-DIMM

Block	Range		Description
0	0~63	0x000~0x03F	Base Configuration and DRAM Parameters
1	64~127	0x040~0x07F	Base Configuration and DRAM Parameters
2	128~191	0x080~0x0BF	...
3	192~255	0x0C0~0x0FF	**Insert Annex A.2: Unbuffered Memory Module Types**
4	256~319	0x100~0x13F	**Insert Annex A.2: Unbuffered Memory Module Types**
5	320~383	0x140~0x17F	**Insert Annex A.2: Unbuffered Memory Module Types**
6	384~447	0x180~0x1BF	**Insert Annex A.2: Unbuffered Memory Module Types**
7~15	448~1023	0x180~0x3FF	...

4.3 RDIMM Overlay Schema

Key Byte 2 contains value 0x12 (DDR5)
Key Byte 3 contains any of the following values:

- 0x01, RDIMM

PROPOSED

- 0x08, SO-RDIMM

Block	Range		Description
0	0~63	0x000~0x03F	Base Configuration and DRAM Parameters
1	64~127	0x040~0x07F	Base Configuration and DRAM Parameters
2	128~191	0x080~0x0BF	...
3	192~255	0x0C0~0x0FF	**Insert Annex A.3: Registered Memory Module Types**
4	256~319	0x100~0x13F	**Insert Annex A.3: Registered Memory Module Types**
5	320~383	0x140~0x17F	**Insert Annex A.3: Registered Memory Module Types**
6	384~447	0x180~0x1BF	**Insert Annex A.3: Registered Memory Module Types**
7~15	448~1023	0x180~0x3FF	...

PROPOSED

4.4 LRDIMM Overlay Schema

Key Byte 2 contains value 0x12 (DDR5)
Key Byte 3 contains any of the following values:

- 0x04, LRDIMM

Block	Range		Description
0	0~63	0x000~0x03F	Base Configuration and DRAM Parameters
1	64~127	0x040~0x07F	Base Configuration and DRAM Parameters
2	128~191	0x080~0x0BF	...
3	192~255	0x0C0~0x0FF	**Insert Annex A.4: Load Reduced Memory Module Types**
4	256~319	0x100~0x13F	**Insert Annex A.4: Load Reduced Memory Module Types**
5	320~383	0x140~0x17F	**Insert Annex A.4: Load Reduced Memory Module Types**
6	384~447	0x180~0x1BF	**Insert Annex A.4: Load Reduced Memory Module Types**
7~15	448~1023	0x180~0x3FF	...

4.5 DDIMM Overlay Schema

Key Byte 2 contains value 0x12 (DDR5)
Key Byte 3 contains any of the following values:

- 0x07, DDIMM

Block	Range		Description
0	0~63	0x000~0x03F	Base Configuration and DRAM Parameters
1	64~127	0x040~0x07F	Base Configuration and DRAM Parameters
2	128~191	0x080~0x0BF	...
3	192~255	0x0C0~0x0FF	**Insert Annex A.5: Differential Memory Module Types**
4	256~319	0x100~0x13F	**Insert Annex A.5: Differential Memory Module Types**
5	320~383	0x140~0x17F	**Insert Annex A.5: Differential Memory Module Types**

Block	Range		Description
6	384~447	0x180~0x1BF	**Insert Annex A.5: Differential Memory Module Types**
7~15	448~1023	0x180~0x3FF	...

4.6 NVDIMM-N Overlay Schema

Key Byte 2 contains value 0x12 (DDR5)
Key Byte 3 contains any of the following values:

- 0x9X, NVDIMM-N Hybrid

Block	Range		Description
0	0~63	0x000~0x03F	Base Configuration and DRAM Parameters
1	64~127	0x040~0x07F	Base Configuration and DRAM Parameters
2	128~191	0x080~0x0BF	...
3	192~255	0x0C0~0x0FF	**Insert Annex A.6: NVDIMM-N Memory Module Types**
4	256~319	0x100~0x13F	**Insert Annex A.6: NVDIMM-N Memory Module Types**
5	320~383	0x140~0x17F	**Insert Annex A.6: NVDIMM-N Memory Module Types**
6	384~447	0x180~0x1BF	**Insert Annex A.6: NVDIMM-N Memory Module Types**
7~15	448~1023	0x180~0x3FF	...

4.7 NVDIMM-P Overlay Schema

Key Byte 2 contains value 0x12 (DDR5)
Key Byte 3 contains any of the following values:

- 0xAX, NVDIMM-P Hybrid

Block	Range		Description
0	0~63	0x000~0x03F	Base Configuration and DRAM Parameters
1	64~127	0x040~0x07F	Base Configuration and DRAM Parameters
2	128~191	0x080~0x0BF	...
3	192~255	0x0C0~0x0FF	**Insert Annex A.7: NVDIMM-P Memory Module Types**
4	256~319	0x100~0x13F	**Insert Annex A.7: NVDIMM-P Memory Module Types**
5	320~383	0x140~0x17F	**Insert Annex A.7: NVDIMM-P Memory Module Types**
6	384~447	0x180~0x1BF	**Insert Annex A.7: NVDIMM-P Memory Module Types**
7~15	448~1023	0x180~0x3FF	...

After programming the SPD contents, suppliers of JEDEC compliant modules must set the write protect bits for SPD device blocks 0 through 5. See the SPD5xx8 Device Specification for details on the Write Protect command protocol.

PROPOSED

PROPOSED

5.0 Parsing the SPD

Some Relevant SPD Bytes for Parsing	
SPD Byte(s)	**Definition**
1	SPD revision for this memory module
2	DRAM interface type presented or emulated
3	Memory module interface type
0~125	Base configuration and DRAM parameters
126~127	CRC for bytes 0~125
192~445	Module specific parameters
446~447	CRC for bytes 192~445

The system BIOS will acquire information from the SPD in order to properly configure the systems memory controller. It is assumed the BIOS will parse the SPD data in the order listed below.

Step 1: Parse Byte 2 - Verify the installed DRAM type is supported.
The first step is to verify the validity of the contents of the SPD. Each section of the SPD has a 16-bit cyclic redundancy check (CRC) in the last two bytes of the section. This value represent the CRC for the previous bytes in that section of the SPD contents. A BIOS should verify the SPD contents prior to parsing the contents. The CRC for bytes 0~125 is stored in bytes 126~127, and the CRC for bytes 192~445 is stored in bytes 446~447.

Step 2: Parse Byte 2 - Verify the installed DRAM type is supported.
The first step in parsing the SPD is to verify that the DRAM type installed is supported by looking at DRAM device type byte 2. While it is usually not possible to physically plug in the wrong memory type, for example a DDR3 module size or key location should prevent insertion into a DDR5 system, there are cases where byte 2 is used to prevent accidental use of an incompatible memory type.

Step 3: Parse Byte 1 - Verify SPD compatibility. See Section 6 - SPD Revision Progression
The SPD revision byte 1 “encoding” nibble may be used to force legacy systems to reject newer modules. This would typically only occur if a critical error were found in SPD encoding that would require a “fix”. In this case, as in the case of an unsupported DRAM type, system initialization must be halted immediately.

The SPD revision stored in Byte 1 applies to all information for the module, including base information and module specific information. Each SPD revision exactly defines how many bytes are valid in all other SPD blocks. The number of supported bytes (or bits) may increase from one SPD revision to another within each block as indicated by the “additions” nibble of the SPD revision. For example, an SPD revision 1.3 has more bytes or bits defined than SPD revision 1.2.

This progression of SPD contents is important for the BIOS to DIMM compatibility model. An older system may have a BIOS that only understands SPD revision 1.2 encoding, so if a module is installed that contains revision 1.3 information, the system can accurately interpret all of the historical revision 1.2 information retained in the module that is the subset of the revision 1.3 specification. Similarly, if a module with SPD revision 1.1 information is installed, that same BIOS can interpret all information that was current at the time that SPD 1.1 was defined. Therefore, BIOSes must maintain a knowledge of the active information for each historical SPD revision in order to support older modules.

PROPOSED

New in DDR5 SPD contents definition is a separate revision byte for sections of the contents. For example, the revision byte 1 covers only the base configuration information blocks, bytes 0 to 127. There is a separate revision byte for other sections such as the standard module parameters in bytes 192-447. The same scheme of contents and additions nibbles is used in each of these sections to allow forward and backward compatibility. Having separate revision levels in various sections of the SPD contents allows those sections to change independently.

Step 4: Parse Byte 3 - Determine module type and appropriate overlays.
Key byte 3 for module type determines the subsequent use of overlay information. Byte 3 defines the host to module interface style: unbuffered, registered, load reduced, differential, or hybrid. Standard module types are defined in Annexes N.1.x.

Step 5: Parse Bytes 0-127 - Make base configuration settings to memory interface based on these bytes.
All module types are required to read and interpret this block of data to set up the DRAM type, maximum operating frequency, the number of row, column, bank bits, write recovery time, etc. While these bytes primarily describe the timing of the DRAMs, timing represents the capabilities of the module and it may be necessary to downgrade the timing based on other factors including layout or support components on the module, such as registers.

Step 6: Parse Bytes 192-447 - Configure Standard module memory interface.
These bytes will be referenced and used by the system as needed based on the Standard module type that was determined after Byte 3 was parsed as indicated in Step 2. Bytes 192-447 are coded differently for each standard module type as defined in Annex N.1.x. This section has its own revision byte to assist in parsing the values in the section.

6.0 SPD Revision Progression

SPD Contents sections have a revision code for that section of the specification. This allows each section to evolve over time independently as much as possible. For example a system may need to parse one revision level for the Base Configuration section (bytes 0~127) and a different revision level for the Standard Module Parameters section (bytes 192-447).

Hypothetical SPD Revision Progression Showing Revision Relationships		
Section	**Bytes**	**Revision Byte**
Base Configuration and SDRAM Parameters	0~127	1
Standard Module Parameters	192~447	192

The Additions Level is never reduced even after an increment of the Encoding Level. For example, if the current SPD revision level were 1.2 and a change in Encoding Level were approved, the next revision level would be 2.2. If additions to revision 2.2 were approved, the next revision would be 2.3. Changes in the Encoding Level are extremely rare, however, since they can create incompatibilities with older systems.

The exceptions to the above rule are the SPD revision levels used during development prior to the Revision 1.0 release. Revisions 0.0 through 0.9 are used to indicate sequential pre-production SPD revision levels, however the first production release will be Revision 1.0.

PROPOSED

PROPOSED

7.0 Address map

The following is the SPD address map for all DDR5 modules. It describes where the individual lookup table entries will be held in the serial non-volatile memory. Consistent with the definition of DDR5 generation SPD devices which have 16 individual write protection blocks of 64 bytes in length each, the SPD contents are aligned with these blocks as follows:

Block	Range		Description
0	0~63	0x000~0x03F	Base Configuration and DRAM Parameters
1	64~127	0x040~0x07F	Base Configuration and DRAM Parameters
2	128~191	0x080~0x0BF	Reserved for future use
3	192~255	0x0C0~0x0FF	Standard Module Parameters -- See annexes N.1.x for details
4	256~319	0x100~0x13F	Standard Module Parameters -- See annexes N.1.x for details
5	320~383	0x140~0x17F	Standard Module Parameters -- See annexes N.1.x for details
6	384~447	0x180~0x1BF	Standard Module Parameters -- See annexes N.1.x for details
7	448~511	0x1C0~0x1FF	Reserved for future use
8	512~575	0x200~0x23F	Manufacturing Information
9	576~639	0x240~0x27F	Manufacturing Information
10	640~703	0x280~0x2BF	End User Programmable
11	704~767	0x2C0~0x2FF	End User Programmable
12	768~831	0x300~0x33F	End User Programmable
13	832~895	0x340~0x37F	End User Programmable
14	896~959	0x380~0x3BF	End User Programmable
15	960~1023	0x3C0~0x3FF	End User Programmable

After programming the SPD contents, suppliers of JEDEC compliant modules must set the write protect bits for SPD device blocks 0 through 5. See the SPD5xx8 Device Specification for details on the block protect command protocol.

Blocks 0~1: Base Configuration and DRAM Parameters

The following table details the location of each byte in this block.

Byte Number		Function Described	Notes
0	0x000	Number of Bytes in SPD Device	
1	0x001	SPD Revision for Base Configuration Parameters	
2	0x002	Key Byte / Host Bus Command Protocol Type	
3	0x003	Key Byte / Module Type	
4	0x004	First SDRAM Density and Package	1
5	0x005	First SDRAM Addressing	1
6	0x006	First SDRAM I/O Width	1
7	0x007	First SDRAM Bank Groups & Banks Per Bank Group	1
8	0x008	Second SDRAM Density and Package	1
9	0x009	Second SDRAM Addressing	1
10	0x00A	Second SDRAM I/O Width	1
11	0x00B	Second SDRAM Bank Groups & Banks Per Bank Group	1

1. From DDR5 SDRAM datasheet.

PROPOSED

Byte Number		Function Described	Notes
12	0x00C	SDRAM Optional Features	
13	0x00D	Thermal and Refresh Options	
14	0x00E	Reserved	
15	0x00F	Reserved	
16	0x010	SDRAM Nominal Voltage, VDD	1
17	0x011	SDRAM Nominal Voltage, VDDQ	1
18	0x012	SDRAM Nominal Voltage, VPP	1
19	0x013	Reserved	1
20	0x014	SDRAM Minimum Cycle Time (t_{CKAVG}min), Least Significant Byte	1
21	0x015	SDRAM Minimum Cycle Time (t_{CKAVG}min), Most Significant Byte	1
22	0x016	SDRAM Maximum Cycle Time (t_{CKAVG}max), Least Significant Byte	1
23	0x017	SDRAM Maximum Cycle Time (t_{CKAVG}max), Most Significant Byte	1
24	0x018	CAS Latencies Supported, First Byte	1
25	0x019	CAS Latencies Supported, Second Byte	1
26	0x01A	CAS Latencies Supported, Third Byte	1
27	0x01B	CAS Latencies Supported, Fourth Byte	1
28	0x01C	CAS Latencies Supported, Fifth Byte	1
29	0x01D	Reserved	1
30	0x01E	SDRAM Minimum CAS Latency Time (t_{AA}min), Least Significant Byte	1
31	0x01F	SDRAM Minimum CAS Latency Time (t_{AA}min), Most Significant Byte	1
32	0x020	SDRAM Minimum RAS to CAS Delay Time (t_{RCD}min), Least Significant Byte	1
33	0x021	SDRAM Minimum RAS to CAS Delay Time (t_{RCD}min), Most Significant Byte	1
34	0x022	SDRAM Minimum Row Precharge Delay Time (t_{RP}min), Least Significant Byte	1
35	0x023	SDRAM Minimum Row Precharge Delay Time (t_{RP}min), Most Significant Byte	1
36	0x024	SDRAM Minimum Active to Precharge Delay Time (t_{RAS}min), Least Significant Byte	1
37	0x025	SDRAM Minimum Active to Precharge Delay Time (t_{RAS}min), Most Significant Byte	1
38	0x026	SDRAM Minimum Active to Active/Refresh Delay Time (t_{RC}min), Least Significant Byte	1
39	0x027	SDRAM Minimum Active to Active/Refresh Delay Time (t_{RC}min), Most Significant Byte	1
40	0x28	SDRAM Minimum Write Recovery Time (t_{WR}min), Least Significant Byte	1
41	0x29	SDRAM Minimum Write Recovery Time (t_{WR}min), Most Significant Byte	1
42	0x2A	SDRAM Minimum Refresh Recovery Delay Time (t_{RFC1}min, t_{RFC1_slr} min), Least Significant Byte	1
43	0x2B	SDRAM Minimum Refresh Recovery Delay Time (t_{RFC1}min, t_{RFC1_slr} min), Most Significant Byte	1
44	0x02C	SDRAM Minimum Refresh Recovery Delay Time (t_{RFC2}min, t_{RFC2_slr} min), Least Significant Byte	1
45	0x02D	SDRAM Minimum Refresh Recovery Delay Time (t_{RFC2}min, t_{RFC2_slr} min), Most Significant Byte	1

1. From DDR5 SDRAM datasheet.

PROPOSED

Byte Number		Function Described	Notes
46	0x02E	SDRAM Minimum Refresh Recovery Delay Time (t_{RFCsb}min, $t_{RFCsb_}$slr min), Least Significant Byte	1
47	0x02F	SDRAM Minimum Refresh Recovery Delay Time ($t_{RFCsb_}$dlr min), Most Significant Byte	1
48	0x030	SDRAM Minimum Refresh Recovery Delay Time, 3DS Different Logical Rank ($t_{RFC1_}$dlr min), Least Significant Byte	1
49	0x031	SDRAM Minimum Refresh Recovery Delay Time, 3DS Different Logical Rank ($t_{RFC1_}$dlr min), Most Significant Byte	1
50	0x032	SDRAM Minimum Refresh Recovery Delay Time, 3DS Different Logical Rank ($t_{RFC2_}$dlr min), Least Significant Byte	1
51	0x033	SDRAM Minimum Refresh Recovery Delay Time, 3DS Different Logical Rank ($t_{RFC2_}$dlr min), Most Significant Byte	1
52	0x034	SDRAM Minimum Refresh Recovery Delay Time, 3DS Different Logical Rank ($t_{RFCsb_}$dlr min), Least Significant Byte	1
53	0x035	SDRAM Minimum Refresh Recovery Delay Time, 3DS Different Logical Rank ($t_{RFCsb_}$dlr min), Most Significant Byte	1
54~125	0x036~0x07D	Reserved -- must be coded as 0x00	
126	0x07E	CRC for Base Configuration Section, Least Significant Byte	
127	0x07F	CRC for Base Configuration Section, Most Significant Byte	

1. From DDR5 SDRAM datasheet.

Block 2: Reserved for future use

Blocks 3~6: Module Specific Parameters

Bytes 192~447 (0x0C0~0x1BF) Parameters in this block are specific to the module type as selected by the contents of SPD Key Byte 3 bits 3~0. Refer to the appropriate annex for detailed byte descriptions.

Block 7: Reserved for future use

Blocks 8~9: Manufacturing Information

Bytes 512~639 (0x200~0x27F) The following table details the location of each byte in this block.

Byte Number		Function Described	Notes
512	0x200	Module Manufacturer's ID Code, First Byte	1
513	0x201	Module Manufacturer's ID Code, Second Byte	1
514	0x202	Module Manufacturing Location	1
515~516	0x203~0x204	Module Manufacturing Date	1
517~520	0x205~0x208	Module Serial Number	1
521~550	0x209~0x226	Module Part Number	1
551	0x227	Module Revision Code	
552	0x228	DRAM Manufacturer's ID Code, First Byte	1
553	0x229	DRAM Manufacturer's ID Code, Second Byte	1
554	0x22A	DRAM Stepping	
555~637	0x22B~0x27D	Module Manufacturer's Specific Data	

Byte Number		Function Described	Notes
638~639	0x27E~0x22F	Reserved; must be coded as 0x0000	1
1. Required byte			

Blocks 10~15: End User Programmable

Bytes 640~1023 (0x280~0x3FF) Bytes in these blocks are reserved for use by end users. Module manufacturers should not assert write protect on blocks 10~15 unless requested to do so by customers.

ASCII Decode Matrix for SPDs

The following table is a subset of the full ASCII standard which is used for coding bytes in the Serial Presence Detect EEPROM that require ASCII characters:

	Second Hex Digit in Pair															
First Hex Digit in Pair	**0**	**1**	**2**	**3**	**4**	**5**	**6**	**7**	**8**	**9**	**A**	**B**	**C**	**D**	**E**	**F**
2	Blank Space								(	)				- Dash	. Period	
3	0	1	2	3	4	5	6	7	8	9						
4		A	B	C	D	E	F	G	H	I	J	K	L	M	N	O
5	P	Q	R	S	T	U	V	W	X	Y	Z					
6		a	b	c	d	e	f	g	h	i	j	k	l	m	n	o
7	p	q	r	s	t	u	v	w	x	y	z					

Examples:

0x20 = Blank Space
0x34 = ‘4’
0x41 = ‘A’

SPD Bytes 329~348	
Manufacturer’s PN	**Coded in ASCII**
13M32734BCD-260Y	31334D3332373334424344 2D323630592020

PROPOSED

PROPOSED

1.0 Details of each byte

1.1 Blocks 0 & 1: General Configuration Section: Bytes 0~127 (0x000~0x07F)

This section contains defines parameters that are common to all DDR5 module types with DDR5 SDRAM as the media type, and provides “key bytes” to allow overlay of module specific information. These bytes are defined when Key Byte 2 contains 18 (0x12), DDR5 SDRAM.

Byte 0 (0x000): Number of Bytes in SPD Device

The least significant nibble of this byte describes the total number of bytes used by the module manufacturer for the SPD data and any (optional) specific supplier information. The byte count includes the fields for all required and optional data. Bits 6~4 describe the total size of the serial memory used to hold the Serial Presence Detect data.

Number of Bytes in SPD Device		
Bit 7	**Bits 6~4**	**Bits 3~0**
Reserved	**SPD Bytes Total**	**Reserved**
Reserved; must be coded as 0	000: Undefined 001: 256 010: 512 011: 1024 All others reserved	Reserved; must be coded as 0000

Byte 1 (0x001): SPD Revision for Base Configuration Parameters

This byte describes the compatibility level of the encoding of the bytes contained in the SPD EEPROM, and the current collection of valid defined bytes. Software should examine the upper nibble (Encoding Level) to determine if it can correctly interpret the contents of the module SPD. The lower nibble (Additions Level) can optionally be used to determine which additional bytes or attribute bits have been defined; however, since any undefined additional byte must be encoded as 0x00 or undefined attribute bit must be defined as 0, software can safely detect additional bytes and use safe defaults if a zero encoding is read for these bytes.

SPD Revision for Base Configuration Parameters										
Production Status	**SPD Revision**	**Encoding Level**				**Additions Level**				**Hex**
		Bit 7	**Bit 6**	**Bit 5**	**Bit 4**	**Bit 3**	**Bit 2**	**Bit 1**	**Bit 0**	
Pre-production	Revision 0.0	0	0	0	0	0	0	0	0	00
	Revision 0.1	0	0	0	0	0	0	0	1	01
	...	.	.	.	.	.	.	.	.	.
	Revision 0.9	0	0	0	0	1	0	0	1	09
Production	Revision 1.0	0	0	0	1	0	0	0	0	10
	Revision 1.1	0	0	0	1	0	0	0	1	11
	...	.	.	.	.	.	.	.	.	...
Undefined	Undefined	1	1	1	1	1	1	1	1	FF

The Additions Level is never reduced even after an increment of the Encoding Level. For example, if the current SPD revision level were 1.2 and a change in Encoding Level were approved, the next revision level would be 2.2. If additions to revision 2.2 were approved, the next revision would be 2.3. Changes in the Encoding Level are extremely rare, however, since they can create incompatibilities with older systems.

The exceptions to the above rule are the SPD revision levels used during development prior to the Revision 1.0 release. Revisions 0.0 through 0.9 are used to indicate sequential pre-production SPD revision levels, however the first production release will be Revision 1.0.

Revisions for each module specific overlay are coded in the same format so that each module type can evolve over time independent of the base configuration parameters section.

PROPOSED

PROPOSED

Byte 2 (0x002): Key Byte / Host Bus Command Protocol Type

This byte is the key byte used by the system BIOS to determine how to interpret all other bytes in the SPD EEPROM. The BIOS must check this byte first to ensure that the EEPROM data is interpreted correctly. This command protocol is often based on the interface parameters for a specific memory device such as a DDR5 SDRAM, however may also be a general media interface protocol such as DDR5 NVDIMM-P. Protocol extensions such as the use of registers or data buffers must be documented in Byte 3, the Module Type byte, and such differences comprehended and accounted for by the system and memory controller. Some non-DRAM solutions called “Hybrid” use an extension of a DRAM bus protocol, such as NVDIMM-N, and use the code for the emulated DRAM protocol in this byte, such as DDR4 SDRAM.

Key Byte / Host Bus Command Protocol Type		
Line #	**Hex**	**SDRAM / Module Type Corresponding to Key Byte**
0	00	Reserved
1	01	Fast Page Mode
2	02	EDO
3	03	Pipelined Nibble
4	04	SDRAM
5	05	ROM
6	06	DDR SGRAM
7	07	DDR SDRAM
8	08	DDR2 SDRAM
9	09	DDR2 SDRAM FB-DIMM
10	0A	DDR2 SDRAM FB-DIMM PROBE
11	0B	DDR3 SDRAM
12	0C	DDR4 SDRAM
13	0D	Reserved
14	0E	DDR4E SDRAM
15	0F	LPDDR3 SDRAM
16	10	LPDDR4 SDRAM
17	11	LPDDR4X SDRAM
18	12	DDR5 SDRAM
19	13	LPDDR5 SDRAM
20	14	DDR5 NVDIMM-P
-	-	-
253	FD	Reserved
254	FE	Reserved
255	FF	Reserved

PROPOSED

Byte 3 (0x003): Key Byte / Module Type

This byte is a Key Byte used to index the module specific section of the SPD from bytes 512~639. Byte 3 bits 3~0 identifies the SDRAM memory module type, and bits 7~4 describe hybrid memory extensions.

Some modules may have no base memory, but will have only a secondary memory type. For example, a Flash-only memory module. These are classified as “hybrid” for the purposes of interpreting the SPD. Where base memory parameters apply to this class of hybrid module, these will be documented with those bytes in the base section.

Key Byte / Module Type		
Bit 7	**Bits 6~4**	**Bits 3~0**
Hybrid	**Hybrid Media**	**Base Module Type**
0: Not hybrid (Module is DRAM only) 1: Hybrid module (See bits 6~4 for hybrid type)	000: Not hybrid 001: NVDIMM-N Hybrid 010: NVDIMM-P Hybrid All other codes reserved	0000: Reserved 0001: RDIMM 0010: UDIMM 0011: SO-DIMM 0100: LRDIMM 0101: Reserved 0110: Reserved 0111: Reserved 1000: SO-RDIMM 1001: Reserved 1010: DDIMM 1011: Solder down 1100: Reserved 1101: Reserved 1110: Reserved 1111: Reserved
Base Module Type Definitions: Solder down: Direct attachment to memory controller RDIMM: Registered Dual In-Line Memory Module UDIMM: Unbuffered Dual In-Line Memory Module SO-DIMM: Unbuffered Small Outline Dual In-Line Memory Module LRDIMM: Load Reduced Dual In-Line Memory Module DDIMM: Differential Dual In-Line Memory Module SO-RDIMM: Unbuffered Small Outline Registered Dual In-Line Memory Module Hybrid Memory Type Definitions: NVDIMM-N: Non-Volatile Dual In-Line Memory Module, Hybrid module with a DDR5 SDRAM interface with one or more non-DRAM components for data storage NVDIMM-P: Non-Volatile Dual In-Line Memory Module, Hybrid module with a DDR5 NVDIMM-P interface with one or more non-DRAM components for data storage		

Examples:

0x01: RDIMM, no hybrid memory present
0x91: RDIMM, NVDIMM-N hybrid memory present
0x94: LRDIMM, NVDIMM-N hybrid memory present
0x0B = soldered down memory, no hybrid memory present

Byte 4 (0x004): First SDRAM Density and Package

This byte describes the SDRAM package type, loading as seen by the system, and device density in Gbits. These values comes from the DDR5 SDRAM data sheet, JESD79-5. This byte applies

to the even rank SDRAMs for asymmetrical memory configurations, or for all SDRAMs for symmetrical configurations.

First SDRAM Density and Package	
Bits 7~5	**Bits 4~0**
Die Per Package	**SDRAM Density Per Die**
000: 1 die; Monolithic SDRAM 001: Reserved 010: 2 die; 2H 3DS 011: 4 die; 4H 3DS 100: 8 die; 8H 3DS 101: 16 die; 16H 3DS All others reserved	00000: No memory; not defined 00001: 4 Gb 00010: 8 Gb 00011: 12 Gb 00100: 16 Gb 00101: 24 Gb 00110: 32 Gb 00111: 48 Gb 01000: 64 Gb All others reserved

Byte 5 (0x005): First SDRAM Addressing

This byte describes the number SDRAM column and row address bits. These values comes from the DDR5 SDRAM data sheet, JESD79-5. This byte applies to the even rank SDRAMs for asymmetrical memory configurations, or for all SDRAMs for symmetrical configurations.

First SDRAM Addressing	
Bits 7~5	**Bits 4~0**
First SDRAM Column Address Bits	**First SDRAM Row Address Bits**
000: 10 columns 010: 11 columns All others reserved	00000: 16 rows 00010: 17 rows 00011: 18 rows All others reserved

Byte 6 (0x006): First SDRAM I/O Width

This byte describes the number SDRAM I/O bits (DQ) and the number of bank groups. These values comes from the DDR5 SDRAM data sheet, JESD79-5. This byte applies to the even rank SDRAMs for asymmetrical memory configurations, or for all SDRAMs for symmetrical configurations.

PROPOSED

PROPOSED

First SDRAM I/O Width	
Bits 7~5	**Bits 4~0**
SDRAM I/O Width	**Reserved**
000: x4 001: x8 010: x16 011: x32 All others reserved	Reserved; must be coded as 00000

Byte 7 (0x007): First SDRAM Bank Groups & Banks Per Bank Group

This byte describes the number SDRAM banks per bank group. These values comes from the DDR5 SDRAM data sheet, JESD79-5. This byte applies to the even rank SDRAMs for asymmetrical memory configurations, or for all SDRAMs for symmetrical configurations.

First SDRAM Bank Groups & Banks Per Bank Group		
Bits 7~5	**Bits 4~3**	**Bits 2~0**
First SDRAM Bank Groups	**Reserved**	**First SDRAM Banks Per Bank Group**
000: 1 bank group 001: 2 bank groups 010: 4 bank groups 011: 8 bank groups All others reserved	Reserved; must be coded as 00	000: 1 bank per bank group 001: 2 banks per bank group 010: 4 banks per bank group All others reserved

Byte 8 (0x008): Second SDRAM Density and Package

This byte describes the SDRAM package type, loading as seen by the system, and device density in Gbits. These values comes from the DDR5 SDRAM data sheet, JESD79-5. This byte applies to the odd rank SDRAMs for asymmetrical memory configurations only.

PROPOSED

Second SDRAM Density and Package	
Bits 7~5	**Bits 4~0**
Die Per Package	**SDRAM Density Per Die**
000: 1 die; Monolithic SDRAM 001: Reserved 010: 2 die; 2H 3DS 011: 4 die; 4H 3DS 100: 8 die; 8H 3DS 101: 16 die; 16H 3DS All others reserved	00000: No memory; not defined 00001: 4 Gb 00010: 8 Gb 00011: 12 Gb 00100: 16 Gb 00101: 24 Gb 00110: 32 Gb 00111: 48 Gb 01000: 64 Gb All others reserved
Note: This byte is defined only for asymmetrical memory systems; for symmetrical systems this byte must be coded as 0x00.	

Byte 9 (0x009): Second SDRAM Addressing

This byte describes the number SDRAM column and row address bits. These values comes from the DDR5 SDRAM data sheet, JESD79-5. This byte describes the number SDRAM bank groups. These values comes from the DDR5 SDRAM data sheet, JESD79-5. This byte applies to the odd rank SDRAMs for asymmetrical memory configurations only.

Second SDRAM Addressing	
Bits 7~5	**Bits 4~0**
Second SDRAM Column Address Bits	**Second SDRAM Row Address Bits**
000: 10 columns 010: 11 columns All others reserved	00000: 16 rows 00010: 17 rows 00011: 18 rows All others reserved
Note: This byte is defined only for asymmetrical memory systems; for symmetrical systems this byte must be coded as 0x00.	

Byte 10 (0x00A): Secondary SDRAM I/O Width

This byte describes the number SDRAM I/O bits (DQ) and the number of bank groups. These values comes from the DDR5 SDRAM data sheet, JESD79-5. This byte applies to the odd rank SDRAMs for asymmetrical memory configurations only.

Second SDRAM I/O Width	
Bits 7~5	**Bits 4~0**
SDRAM I/O Width	**Reserved**
000: x4 001: x8 010: x16 011: x32 All others reserved	Reserved; must be coded as 00000
Note: This byte is defined only for asymmetrical memory systems; for symmetrical systems this byte must be coded as 0x00.	

Byte 11 (0x00B): Second SDRAM Bank Groups & Banks Per Bank Group

This byte describes the number SDRAM banks per bank group. These values comes from the DDR5 SDRAM data sheet, JESD79-5. This byte applies to the odd rank SDRAMs for asymmetrical memory configurations only.

Second SDRAM Bank Groups & Banks Per Bank Group		
Bits 7~5	**Bits 4~3**	**Bits 2~0**
Second SDRAM Bank Groups	**Reserved**	**Second SDRAM Banks Per Bank Group**
000: 1 bank group 001: 2 bank groups 010: 4 bank groups 011: 8 bank groups All others reserved	Reserved; must be coded as 00	000: 1 bank per bank group 001: 2 banks per bank group 010: 4 banks per bank group All others reserved
Note: This byte is defined only for asymmetrical memory systems; for symmetrical systems this byte must be coded as 0x00.		

Byte 12 (0x00C): SDRAM Optional Features

This byte defines support for certain SDRAM features. This value comes from the DDR5 SDRAM data sheet, JESD79-5.

PROPOSED

PROPOSED

SDRAM Optional Features			
Bits 7~6	**Bit 5**	**Bit 4**	**Bits 3~0**
Post Package Repair (PPR)	**Soft PPR**	**BL32**	**Reserved**
00: PPR not supported 01: Post package repair supported, one row per bank group 10: Reserved 11: Reserved	0: Soft PPR not supported 1: Soft PPR supported	0: Burst length 32 not supported 1: Burst length 32 supported	Reserved; must be coded as 0000

Bytes 13~15 (0x00D~0x00F)

Reserved; must be coded as 0x00.

Byte 16 (0x010): SDRAM Nominal Voltage, VDD

This byte describes the voltage levels for the SDRAM VDD supply only.

'Operable' is defined as the VDD voltage at which module operation is allowed using the performance values programmed in the SPD.

'Endurant' is defined as the VDD voltage at which the module may be powered without adversely affecting the life expectancy or reliability. Operation is not supported at this voltage.

SDRAM Nominal Voltage, VDD		
Nominal	**Operable**	**Endurant**
Bits 7~4	**Bits 3~2**	**Bits 1~0**
0000: 1.1 V All others reserved	00: 1.1 V All others reserved	00: 1.1 V All others reserved

Byte 17 (0x011): SDRAM Nominal Voltage, VDDQ

This byte describes the voltage levels for the SDRAM VDDQ supply only.

'Operable', 'Endurant': See byte 16.

SDRAM Nominal Voltage, VDDQ		
Nominal	**Operable**	**Endurant**
Bits 7~4	**Bits 3~2**	**Bits 1~0**
0000: 1.1 V All others reserved	00: 1.1 V All others reserved	00: 1.1 V All others reserved

Byte 18 (0x012): SDRAM Nominal Voltage, VPP

This byte describes the voltage levels for the SDRAM VPP supply only.

'Operable', 'Endurant': See byte 16.

SDRAM Nominal Voltage, VPP		
Nominal	**Operable**	**Endurant**
Bits 7~4	**Bits 3~2**	**Bits 1~0**
0000: 1.8 V All others reserved	00: 1.8 V All others reserved	00: 1.8 V All others reserved

Byte 19 (0x013): Reserved

Reserved; must be coded as 0x00.

Timebases

Timebases in the DDR5 SPD are simplified compared to previous generations. Timing for parameters is expressed in either picosecond (ps) or nanosecond (ns) units. When programming memory controllers, it is often necessary to convert these timings to integer numbers of clocks (nCK) units. The algorithm for this conversion is described next.

Rounding Algorithms

Software algorithms for calculation of timing parameters are subject to rounding errors from many sources. For example, a system may use a memory clock with a nominal frequency of 2200 MHz, or a clock period of 0.454545... ns. Similarly, a system with a memory clock frequency of 2600 MHz yields mathematically a clock period of 0.384615... ns. In most cases, it is impossible to express all digits after the decimal point exactly, and rounding must be done because the DDR5 SDRAM specification establishes a minimum granularity for timing parameters of 1 ps.

Rules for rounding must be defined to allow optimization of device performance without violating device parameters. These algorithms rely on results that are within correction factors on device testing and specification to avoid losing performance due to rounding errors.

These rules are:

- Clock periods such as t_{CKAVG}min are rounded down (RD) to 1 ps of accuracy; for example, 0.454545... ns is defined as 454 ps and 0.357142... ns is defined as 357 ps.
- Using real math, parameters like t_{WR}min, t_{RCD}min, etc. which are programmed in systems in numbers of clocks (nCK) but expressed in units of time (in ns) are divided by the clock period (in ns) yielding a ratio of clock units (nCK), a correction factor of 1% is subtracted, then the result is set to the next higher integer number of clocks:

$$\text{nCK} = \text{ceiling}\left[\left(\frac{\text{parameter_in_ns}}{\text{application_}t_{CK}\text{_in_ns (RD)}}\right) - 0.01\right]$$

- Alternatively, programmers may prefer to use integer math instead of real math by expressing timing in ps, scaling the desired parameter value by 1000, dividing by the application clock period (rounded down (RD) to the nearest ps), adding an inverse correction factor of

PROPOSED

99% (or 990), dividing the result by 1000, then truncating (same as integer math) down to the next lower integer value:

$$nCK = \text{truncate}\left[\frac{\left(\frac{\text{parameter_in_ps} \times 1000}{\text{application_}t_{CK}\text{_in_ps (RD)}}\right) + 990}{1000}\right]$$

- Either algorithm yields identical results. In case of conflict between results, the preferred algorithm is the integer math algorithm.

Example 1, using REAL math to convert t_{WR}min from ns to nCK:

```
// This algorithm subtracts 1% correction factor and rounds up to next integer value

real MTB, FTB, TwrMin, Correction, ClockPeriod, TempNck;
int TwrInNck;

TwrMin = 45;                                    // tWRmin in ns
Correction = 0.01;                              // 1%, per rounding algorithm
ClockPeriod = ApplicationTck;                   // Frequency (clock period) is application dependent
TempNck = TwrMin / ClockPeriod;                 // Initial calculation of nCK
TempNck = TempNck - Correction;                 // Subtract correction factor from nCK
TwrInNck = (int)ceiling(TempNck);               // Ceiling to next higher integer value
```

DDR5 Device Operating at Standard Application Frequencies Timing Parameter: t_{WR}min = 45.0 ns						
Application Speed Grade	Device t_{WR}	Application t_{CK}	Device t_{WR} ÷ Application t_{CK}	1% Correction	t_{WR} / t_{CK} – Correction	Ceiling Result
	ns	ns	ratio (real)	(real)	ratio (real)	nCK (integer)
3200	45.0	0.625	72.00	0.01	71.99	72
3600	45.0	0.555	81.081081	0.01	81.07	82
4000	45.0	0.500	90.00	0.01	89.99	90

Example 2, using INT math to convert t_{WR}min from ns to nCK:

```
// This algorithm uses adds 99.8% of a clock and truncates down to the next lower integer value

int MTB, FTB, TwrMin, ClockPeriod, TempNck, TwrInNck;

TwrMin = 45000;                                 // tWRmin in ps
ClockPeriod = ApplicationTckInPs;               // Clock period is application specific
TempNck = (TwrMin * 1000) / ApplicationTckInPs; // Preliminary nCK calculation, scaled by 1000
TempNck = TempNck + 990;                        // Apply inverse of 1% correction factor
TaaInNck = (int)(TempNck / 1000);               // Truncate to next lower integer
```

DDR5 Device Operating at Standard Application Frequencies Timing Parameter: t_{WR}min = 45.0 ns (45000 ps)					
Application Speed Grade	Device t_{WR}	Application t_{CK}	(Device t_{WR} * 1000) ÷ Application tCK	Add Inverse Correction	Truncate Corrected nCK / 1000
	ps	ps	Scaled nCK	Scaled nCK	nCK (integer)
3200	45000	625	72000	72998	72
3600	45000	555	81081	82071	82
4000	45000	500	90000	90998	90

SDRAM Minimum Cycle Time (t_{CKAVG}min)

PROPOSED

PROPOSED

Byte 20 (0x014): Least Significant Byte
Byte 21 (0x015): Most Significant Byte

This 16-bit word defines the minimum cycle time for the SDRAM module, in picoseconds (ps). This number applies to all applicable components on the module. This byte applies to SDRAM and support components as well as the overall capability of the DIMM. This value comes from the DDR5 SDRAM data sheet, JESD79-5, and support component data sheets.

SDRAM Minimum Cycle Time (t_{CKAVG}min) ps	
Byte 21	**Byte 20**
Bits 15~8	**Bits 7~0**
Values defined from 1 to 65535 ps 0x0000: Reserved	

SDRAM Maximum Cycle Time (t_{CKAVG}max)
Byte 22 (0x016): Least Significant Byte
Byte 23 (0x017): Most Significant Byte

This 16-bit word defines the minimum cycle time for the SDRAM module, in picoseconds (ps). This number applies to all applicable components on the module. This byte applies to SDRAM and support components as well as the overall capability of the DIMM. This value comes from the DDR5 SDRAM data sheet, JESD79-5, and support component data sheets.

SDRAM Maximum Cycle Time (t_{CKAVG}max) ps	
Byte 23	**Byte 22**
Bits 15~8	**Bits 7~0**
Values defined from 1 to 65535 ps 0x0000: Reserved	

PROPOSED

SDRAM CAS Latencies Supported
Byte 24 (0x018): First Byte
Byte 25 (0x019): Second Byte
Byte 26 (0x01A): Third Byte
Byte 27 (0x01B): Fourth Byte
Byte 28 (0x01C): Fifth Byte

These bytes define which CAS Latency (CL) values are supported with one bit per possible CAS Latency. A 1 in a bit position means that CL is supported, a 0 in that bit position means it is not supported. These values come from the DDR5 SDRAM, JESD79-5. CAS Latency Mask covers both DBI and non-DBI modes of operation.

SDRAM CAS Latencies Supported								
Byte 24	**Bit 7**	**Bit 6**	**Bit 5**	**Bit 4**	**Bit 3**	**Bit 2**	**Bit 1**	**Bit 0**
CL =	34	32	30	28	26	24	22	20
Byte 25	**Bit 7**	**Bit 6**	**Bit 5**	**Bit 4**	**Bit 3**	**Bit 2**	**Bit 1**	**Bit 0**
CL =	50	48	46	44	42	40	38	36
Byte 26	**Bit 7**	**Bit 6**	**Bit 5**	**Bit 4**	**Bit 3**	**Bit 2**	**Bit 1**	**Bit 0**
CL =	66	64	62	60	58	56	54	52
Byte 27	**Bit 7**	**Bit 6**	**Bit 5**	**Bit 4**	**Bit 3**	**Bit 2**	**Bit 1**	**Bit 0**
CL =	82	80	78	76	74	72	70	68
Byte 28	**Bit 7**	**Bit 6**	**Bit 5**	**Bit 4**	**Bit 3**	**Bit 2**	**Bit 1**	**Bit 0**
CL =	98	96	94	92	90	88	86	84
For each bit position, 0 means this CAS Latency is not supported, 1 means this CAS Latency is supported.								

Example 1: DDR5-4400A SDRAM

CAS latencies supported: 22, 26, 28, 30, 32, 36, 40

SPD Byte	Bit	7	6	5	4	3	2	1	0	Hex Code
Byte 24	**CAS Latencies**	34	32	30	28	26	24	22	20	
	CL Mask	**0**	**1**	**1**	**1**	**1**	**0**	**1**	**0**	0x7A
Byte 25	**CAS Latencies**	50	48	46	44	42	40	38	36	
	CL Mask	**0**	**0**	**0**	**0**	**0**	**1**	**0**	**1**	0x05
Byte 26	**CAS Latencies**	66	64	62	60	58	56	54	52	
	CL Mask	**0**	**0**	**0**	**0**	**0**	**0**	**0**	**0**	0x00
Byte 27	**CAS Latencies**	82	80	78	76	74	72	70	68	
	CL Mask	**0**	**0**	**0**	**0**	**0**	**0**	**0**	**0**	0x00
Byte 28	**CAS Latencies**	98	96	94	92	90	88	86	84	
	CL Mask	**0**	**0**	**0**	**0**	**0**	**0**	**0**	**0**	0x00

Byte 29 (0x01D)

Reserved; must be coded as 0x00.

PROPOSED

SDRAM Minimum CAS Latency Time (t_{AA}min)
Byte 30 (0x01E): Least Significant Byte
Byte 31 (0x01F): Most Significant Byte

This 16-bit word defines the minimum CAS Latency in picoseconds (ps). This value comes from the DDR5 SDRAM data sheet, JESD79-5.

SDRAM Minimum CAS Latency Time (t_{AA}min) ps	
Byte 31	**Byte 30**
Bits 15~8	**Bits 7~0**
Values defined from 1 to 65535 ps 0x0000: Reserved	

SDRAM Minimum RAS to CAS Delay Time (t_{RCD}min)
Byte 32 (0x020): Least Significant Byte
Byte 33 (0x021): Most Significant Byte

This 16-bit word defines the minimum SDRAM RAS to CAS Delay Time in picoseconds (ps). This value comes from the DDR5 SDRAM data sheet, JESD79-5.

SDRAM Minimum RAS to CAS Delay Time (t_{RCD}min) ps	
Byte 33	**Byte 32**
Bits 15~8	**Bits 7~0**
Values defined from 1 to 65535 ps 0x0000: Reserved	

SDRAM Minimum Row Precharge Delay Time (t_{RP}min)
Byte 34 (0x022): Least Significant Byte
Byte 35 (0x023): Most Significant Byte

This 16-bit word defines the minimum SDRAM Row Precharge Delay Time in picoseconds (ps). This value comes from the DDR5 SDRAM data sheet, JESD79-5.

SDRAM Minimum Row Precharge Delay Time (t_{RP}min) ps	
Byte 35	**Byte 34**
Bits 15~8	**Bits 7~0**
Values defined from 1 to 65535 ps 0x0000: Reserved	

PROPOSED

SDRAM Minimum Active to Precharge Delay Time (t_{RAS}min)
Byte 36 (0x024): Least Significant Byte
Byte 37 (0x025): Most Significant Byte

This 16-bit word defines the minimum SDRAM Active to Precharge Delay Time in picoseconds (ps). This value comes from the DDR5 SDRAM data sheet, JESD79-5.

SDRAM Minimum Active to Precharge Delay Time (t_{RAS}min) ps	
Byte 37	**Byte 36**
Bits 15~8	**Bits 7~0**
Values defined from 1 to 65535 ps 0x0000: Reserved	

SDRAM Minimum Active to Active/Refresh Delay Time (t_{RC}min)
Byte 38 (0x026): Least Significant Byte
Byte 39 (0x027): Most Significant Byte

This 16-bit word defines the minimum SDRAM Active to Active/Refresh Delay Time in picoseconds (ps). This value comes from the DDR5 SDRAM data sheet, JESD79-5.

SDRAM Minimum Active to Active/Refresh Delay Time (t_{RC}min) ps	
Byte 39	**Byte 38**
Bits 15~8	**Bits 7~0**
Values defined from 1 to 65535 ps 0x0000: Reserved	

By DDR5 device design, t_{RC}min must always be greater than or equal to t_{RAS}min + t_{RP}min. When converting time in ns to nCK units using the appropriate rounding algorithms for these three parameters, systems must account for the overall design requirement and choose the larger of t_{RC}min or (t_{RAS}min + t_{RP}min) as a minimum setting.

SDRAM Minimum Write Recovery Time (t_{WR}min)
Byte 40 (0x028): Least Significant Byte
Byte 41 (0x029): Most Significant Byte

This 16-bit word defines the minimum SDRAM Write Recovery Time in picoseconds (ps). This value comes from the DDR5 SDRAM data sheet, JESD79-5.

PROPOSED

SDRAM Minimum Write Recovery Time (t_{WR}min) ps	
Byte 41	**Byte 40**
Bits 15~8	**Bits 7~0**
Values defined from 1 to 65535 ps 0x0000: Reserved	

SDRAM Minimum Refresh Recovery Delay Time (t_{RFC1}min, $t_{RFC1_}$slr min)
Byte 42 (0x02A): Least Significant Byte
Byte 43 (0x02B): Most Significant Byte

This 16-bit word defines the minimum SDRAM Refresh Recovery Time Delay in nanoseconds (ns). t_{RFC1} relates to monolithic SDRAMs, $t_{RFC1_}$slr to 3DS SDRAMs. These values come from the DDR5 SDRAM data sheet, JESD79-5.

SDRAM Minimum Refresh Recovery Delay Time (t_{RFC1}min, $t_{RFC1_}$slr min) ns	
Byte 43	**Byte 42**
Bits 15~8	**Bits 7~0**
Values defined from 1 to 65535 ns 0x0000 = Reserved	
Note: t_{RFC1}min relates to monolithic or DDP SDRAMs, $t_{RFC1_}$slr min relates to 3DS SDRAMs.	

SDRAM Minimum Refresh Recovery Delay Time (t_{RFC2}min, $t_{RFC2_}$slr min)
Byte 44 (0x02C): Least Significant Byte
Byte 45 (0x02D): Most Significant Byte

This 16-bit word defines the minimum SDRAM Refresh Recovery Time Delay in nanoseconds (ns). t_{RFC2} relates to monolithic SDRAMs, $t_{RFC2_}$slr to 3DS SDRAMs. These values come from the DDR5 SDRAM data sheet, JESD79-5.

SDRAM Minimum Refresh Recovery Delay Time (t_{RFC2}min, $t_{RFC2_}$slr min) ns	
Byte 45	**Byte 44**
Bits 15~8	**Bits 7~0**
Values defined from 1 to 65535 ns 0x0000 = Reserved	
Note: t_{RFC2}min relates to monolithic or DDP SDRAMs, $t_{RFC2_}$slr min relates to 3DS SDRAMs.	

SDRAM Minimum Refresh Recovery Delay Time (t_{RFCsb}min, $t_{RFCsb_}$slr min)
Byte 46 (0x02E): Least Significant Byte

PROPOSED

Byte 47 (0x02F): Most Significant Byte

This 16-bit word defines the minimum SDRAM Refresh Recovery Time Delay in nanoseconds (ns). t_{RFCsb} relates to monolithic SDRAMs, $t_{RFCsb_}$slr to 3DS SDRAMs. These values come from the DDR5 SDRAM data sheet, JESD79-5.

SDRAM Minimum Refresh Recovery Delay Time (t_{RFCsb}min) ns	
Byte 47	**Byte 46**
Bits 15~8	**Bits 7~0**
Values defined from 1 to 65535 ns 0x0000: Reserved	
Note: t_{RFCsb}min relates to monolithic or DDP SDRAMs, $t_{RFCsb_}$slr min relates to 3DS SDRAMs.	

SDRAM Minimum Refresh Recovery Delay Time, 3DS Different Logical Rank ($t_{RFC1_}$dlr min)
Byte 48 (0x030): Least Significant Byte
Byte 49 (0x031): Most Significant Byte

This 16-bit word defines the minimum SDRAM Refresh Recovery Time Delay in nanoseconds (ns). $t_{RFC1_}$dlr relates to 3DS SDRAMs only. For monolithic or DDP SDRAMs, these bytes must be encoded as 0x0000. These values come from the DDR5 SDRAM data sheet, JESD79-5.

SDRAM Minimum Refresh Recovery Delay Time ($t_{RFC1_}$dlr min) ns	
Byte 49	**Byte 48**
Bits 15~8	**Bits 7~0**
Values defined from 1 to 65535 ns 0x0000 = Reserved	
Note: These bytes are defined for 3DS only; for monolithic or DDP SDRAMs, code as 0x0000	

SDRAM Minimum Refresh Recovery Delay Time, 3DS Different Logical Rank ($t_{RFC2_}$dlr min)
Byte 50 (0x032): Least Significant Byte
Byte 51 (0x033): Most Significant Byte

This 16-bit word defines the minimum SDRAM Refresh Recovery Time Delay in nanoseconds (ns). $t_{RFC2_}$dlr relates to 3DS SDRAMs only. For monolithic or DDP SDRAMs, these bytes must be encoded as 0x0000. These values come from the DDR5 SDRAM data sheet, JESD79-5.

SDRAM Minimum Refresh Recovery Delay Time (t_{RFC2}_dlr min) ns	
Byte 51	**Byte 50**
Bits 15~8	**Bits 7~0**
Values defined from 1 to 65535 ns 0x0000 = Reserved	
Note: These bytes are defined for 3DS only; for monolithic or DDP SDRAMs, code as 0x0000	

SDRAM Minimum Refresh Recovery Delay Time, 3DS Different Logical Rank (t_{RFCsb}_dlr min)
Byte 52 (0x034): Least Significant Byte
Byte 53 (0x035): Most Significant Byte

This 16-bit word defines the minimum SDRAM Refresh Recovery Time Delay in nanoseconds (ns). t_{RFCsb}_dlr relates to 3DS SDRAMs only. For monolithic SDRAMs, these bytes must be encoded as 0x0000. These values come from the DDR5 SDRAM data sheet, JESD79-5.

SDRAM Minimum Refresh Recovery Delay Time (t_{RFCsb}_dlr min) ns	
Byte 53	**Byte 52**
Bits 15~8	**Bits 7~0**
Values defined from 1 to 65535 ns 0x0000 = Reserved	
Note: These bytes are defined for 3DS only; for monolithic or DDP SDRAMs, code as 0x0000	

PROPOSED

PROPOSED

Primary SDRAM Refresh Management
Byte 54 (0x036): First Byte
Byte 55 (0x037): Second Byte
Secondary SDRAM Refresh Management
Byte 56 (0x038): First Byte
Byte 57 (0x039): Second Byte

These bytes represent the refresh management settings for the SDRAMs used on this module. These are identical to the contents of the DDR5 SDRAM mode registers MR58 and MR59. These values come from the DDR5 SDRAM data sheet, JESD79-5. If all devices in a group (i.e., First or Second) are not matched, the value coded must represent the worst case for any device in the group.

SDRAM Refresh Management, First Byte Bytes 54 (First SDRAM), 56 (Second SDRAM)		
Bits 7~5 (OP[7:5])	**Bits 4~1 (OP[4:1])**	**Bit 0 (OP[0])**
Rolling Accumulated ACT Maximum Management Threshold (RAAMMT)	**Rolling Accumulated ACT Initial Management Threshold (RAAIMT)**	**RFM Required**
000: Invalid 001: Invalid 010: 2X 011: 3X 100: 4X 101: 5X 110: 6X 111: 7X	0000: Invalid 0001: 8 (Normal), 4 (FGR) 0010: 16 (Normal), 8 (FGR) ... 1000: 112 (Normal), 56 (FGR) ... 1111: 120 (Normal), 60 (FGR)	0: Refresh management not required 1: Refresh management required
Notes: “Normal” = Normal refresh mode “FGR” = Fine granularity refresh mode “First” applies to all package ranks of SDRAMs in symmetrical configurations or even ranks in asymmetrical configurations “Second” applies to odd ranks in asymmetrical configurations only		

SDRAM Refresh Management, Second Byte Bytes 55 (First SDRAM), 57 (Second SDRAM)	
Bits 7~6 (OP[7:6])	**Bits 5~0 (OP[5:0])**
RFM RAA Counter Decrement per REF command	**Reserved**
00: RAAIMT 01: RAAIMT * 0.5 Other codes reserved	Reserved; must be coded as 000000
Notes: “First” applies to all package ranks of SDRAMs in symmetrical configurations or even ranks in asymmetrical configurations “Second” applies to odd ranks in asymmetrical configurations only	

Bytes 58~125 (0x03A~0x07D): Reserved, Base Configuration Section

Must be coded as 0x00

PROPOSED

Byte 126 (0x07E): Cyclical Redundancy Code (CRC) for Base Configuration Section, Least Significant Byte
Byte 127 (0x07F): Cyclical Redundancy Code (CRC) for Base Configuration Section, Most Significant Byte

This two-byte field contains the calculated CRC for bytes 0~125 (0x000~0x07D) in the SPD. The following algorithm and data structures (shown in C) are to be followed in calculating and checking the code.

```
int Crc16 (char *ptr, int count)
{
   int crc, i;

   crc = 0;
   while (--count >= 0) {
      crc = crc ^ (int)*ptr++ << 8;
      for (i = 0; i < 8; ++i)
         if (crc & 0x8000)
            crc = crc << 1 ^ 0x1021;
         else
            crc = crc << 1;
   }
   return (crc & 0xFFFF);
}

char spdBytes[] = { SPD_byte_0, SPD_byte_1, ..., SPD_byte_N-1 };
int data16;

data16 = Crc16 (spdBytes, sizeof(spdBytes));
SPD_byte_126 = (char) (data16 & 0xFF);
SPD_byte_127 = (char) (data16 >> 8);
```

PROPOSED

1.0 Example SPD Codes

The following tables show example codes for the SPD contents. These calculations account for the 1% correction factor allowed for digital math inaccuracies.

The clock periods for each standard speed grade used for these calculations are:

tCKmin	
Grade	tCK
3200	0.625
3600	0.555
4000	0.500
4400	0.454
4800	0.416
5200	0.384
5600	0.357
6000	0.333
6400	0.312
6800	0.294
7200	0.277
7600	0.263
8000	0.250
8400	0.238

Core parameters, DDR5 Monolithic SDRAMs

		3200A	3200B	3200C	3600A	3600B	3600C	4000A	4000B	4000C
	tCKmin	0.625	0.625	0.625	0.555	0.555	0.555	0.500	0.500	0.500
	tCKmax	1.000	1.000	1.000	1.000	1.000	1.000	1.000	1.000	1.000
	tAA	13.750	16.250	17.500	14.430	16.650	17.760	14.000	16.000	18.000
	tRCD	13.750	16.250	17.500	14.430	16.650	17.760	14.000	16.000	18.000
	tRP	13.750	16.250	17.500	14.430	16.650	17.760	14.000	16.000	18.000
	tRAS	32.000	32.000	32.000	32.000	32.000	32.000	32.000	32.000	32.000
	tRC	45.750	48.250	49.500	46.430	48.650	49.760	46.000	48.500	50.000
	tWR	30.000	30.000	30.000	29.970	29.970	29.970	30.000	30.000	30.000
SPD #	tCKmin (ps)	625	625	625	555	555	555	500	500	500
20	tCKmin low	0x71	0x71	0x71	0x2B	0x2B	0x2B	0xF4	0xF4	0xF4
21	tCKmin high	0x02	0x02	0x02	0x02	0x02	0x02	0x01	0x01	0x01
SPD #	tCKmax (ps)	1000	1000	1000	1000	1000	1000	1000	1000	1000
22	tCKmax low	0xE8	0xE8	0xE8	0xE8	0xE8	0xE8	0xE8	0xE8	0xE8
23	tCKmax high	0x03	0x03	0x03	0x03	0x03	0x03	0x03	0x03	0x03
SPD #	tAA (ps)	13750	16250	17500	14430	16650	17760	14000	16000	18000
30	tAA low	0xB6	0x7A	0x5C	0x5E	0x0A	0x60	0xB0	0x80	0x50
31	tAA high	0x35	0x3F	0x44	0x38	0x41	0x45	0x36	0x3E	0x46
SPD #	tRCD (ps)	13750	16250	17500	14430	16650	17760	14000	16000	18000
32	tRCD low	0xB6	0x7A	0x5C	0x5E	0x0A	0x60	0xB0	0x80	0x50
33	tRCD high	0x35	0x3F	0x44	0x38	0x41	0x45	0x36	0x3E	0x46
SPD #	tRP (ps)	13750	16250	17500	14430	16650	17760	14000	16000	18000
34	tRP low	0xB6	0x7A	0x5C	0x5E	0x0A	0x60	0xB0	0x80	0x50
35	tRP high	0x35	0x3F	0x44	0x38	0x41	0x45	0x36	0x3E	0x46
SPD #	tRAS (ps)	32000	32000	32000	32000	32000	32000	32000	32000	32000
36	tRAS low	0x00	0x00	0x00	0x00	0x00	0x00	0x00	0x00	0x00
37	tRAS high	0x7D	0x7D	0x7D	0x7D	0x7D	0x7D	0x7D	0x7D	0x7D
SPD #	tRC (ps)	45750	48250	49500	46430	48650	49760	46000	48500	50000
38	tRC low	0xB6	0x7A	0x5C	0x5E	0x0A	0x60	0xB0	0x74	0x50
39	tRC high	0xB2	0xBC	0xC1	0xB5	0xBE	0xC2	0xB3	0xBD	0xC3
SPD #	tWR (ps)	30000	30000	30000	29970	29970	29970	30000	30000	30000
40	tWR low	0x30	0x30	0x30	0x12	0x12	0x12	0x30	0x30	0x30
41	tWR high	0x75	0x75	0x75	0x75	0x75	0x75	0x75	0x75	0x75

PROPOSED

	4400A	4400B	4400C	4800A	4800B	4800C	5200A	5200B	5200C
tCKmin	0.454	0.454	0.454	0.416	0.416	0.416	0.384	0.384	0.384
tCKmax	1.000	1.000	1.000	1.000	1.000	1.000	1.000	1.000	1.000
tAA	14.528	16.344	18.160	14.144	16.640	17.472	14.592	16.128	17.664
tRCD	14.528	16.344	18.160	14.144	16.640	17.472	14.592	16.128	17.664
tRP	14.528	16.344	18.160	14.144	16.640	17.472	14.592	16.128	17.664
tRAS	32.000	32.000	32.000	32.000	32.000	32.000	32.000	32.000	32.000
tRC	46.528	48.344	50.160	46.144	48.640	49.472	46.615	48.154	49.692
tWR	29.964	29.964	29.964	29.952	29.952	29.952			

SPD #										
	tCK (ps)	454	454	454	416	416	416	384	384	384
20	tCK low	0xC6	0xC6	0xC6	0xA0	0xA0	0xA0	0x80	0x80	0x80
21	tCK high	0x01	0x01	0x01	0x01	0x01	0x01	0x01	0x01	0x01

SPD #										
	tCKmax (ps)	1000	1000	1000	1000	1000	1000	1000	1000	1000
22	tCKmax low	0xE8	0xE8	0xE8	0xE8	0xE8	0xE8	0xE8	0xE8	0xE8
23	tCKmax high	0x03	0x03	0x03	0x03	0x03	0x03	0x03	0x03	0x03

SPD #										
	tAA (ps)	14528	16344	18160	14144	16640	17472	14592	16128	17664
30	tAA low	0xC0	0xD8	0xF0	0x40	0x00	0x40	0x00	0x00	0x00
31	tAA high	0x38	0x3F	0x46	0x37	0x41	0x44	0x39	0x3F	0x45

SPD #										
	tRCD (ps)	14528	16344	18160	14144	16640	17472	14592	16128	17664
32	tRCD low	0xC0	0xD8	0xF0	0x40	0x00	0x40	0x00	0x00	0x00
33	tRCD high	0x38	0x3F	0x46	0x37	0x41	0x44	0x39	0x3F	0x45

SPD #										
	tRP (ps)	14528	16344	18160	14144	16640	17472	14592	16128	17664
34	tRP low	0xC0	0xD8	0xF0	0x40	0x00	0x40	0x00	0x00	0x00
35	tRP high	0x38	0x3F	0x46	0x37	0x41	0x44	0x39	0x3F	0x45

SPD #										
	tRAS (ps)	32000	32000	32000	32000	32000	32000	32000	32000	32000
36	tRAS low	0x00	0x00	0x00	0x00	0x00	0x00	0x00	0x00	0x00
37	tRAS high	0x7D	0x7D	0x7D	0x7D	0x7D	0x7D	0x7D	0x7D	0x7D

SPD #										
	tRC (ps)	46528	48344	50160	46144	48640	49472	46615	48154	49692
38	tRC low	0xC0	0xD8	0xF0	0x40	0x00	0x40	0x17	0x1A	0x1C
39	tRC high	0xB5	0xBC	0xC3	0xB4	0xBE	0xC1	0xB6	0xBC	0xC2

SPD #										
	tWR (ps)	29964	29964	29964	29952	29952	29952	0	0	0
40	tWR low	0x0C	0x0C	0x0C	0x00	0x00	0x00	0x00	0x00	0x00
41	tWR high	0x75	0x75	0x75	0x75	0x75	0x75	0x00	0x00	0x00

PROPOSED

	5600A	5600B	5600C	6000A	6000B	6000C	6400A	6400B	6400C
tCKmin	0.357	0.357	0.357	0.333	0.333	0.333	0.312	0.312	0.312
tCKmax	1.000	1.000	1.000	1.000	1.000	1.000	1.000	1.000	1.000
tAA	14.280	16.422	17.850	13.986	15.984	17.982	14.352	16.224	17.472
tRCD	14.280	16.422	17.850	13.986	15.984	17.982	14.352	16.224	17.472
tRP	14.280	16.422	17.850	13.986	15.984	17.982	14.352	16.224	17.472
tRAS	32.000	32.000	32.000	32.000	32.000	32.000	32.000	32.000	32.000
tRC	46.286	48.429	49.857	46.000	48.000	50.000	46.375	48.250	49.500
tWR									

SPD #										
	tCK (ps)	357	357	357	333	333	333	312	312	312
20	tCK low	0x65	0x65	0x65	0x4D	0x4D	0x4D	0x38	0x38	0x38
21	tCK high	0x01	0x01	0x01	0x01	0x01	0x01	0x01	0x01	0x01

SPD #										
	tCKmax (ps)	1000	1000	1000	1000	1000	1000	1000	1000	1000
22	tCKmax low	0xE8	0xE8	0xE8	0xE8	0xE8	0xE8	0xE8	0xE8	0xE8
23	tCKmax high	0x03	0x03	0x03	0x03	0x03	0x03	0x03	0x03	0x03

SPD #										
	tAA (ps)	14280	16422	17850	13986	15984	17982	14352	16224	17472
30	tAA low	0xC8	0x26	0xBA	0xA2	0x70	0x3E	0x10	0x60	0x40
31	tAA high	0x37	0x40	0x45	0x36	0x3E	0x46	0x38	0x3F	0x44

SPD #										
	tRCD (ps)	14280	16422	17850	13986	15984	17982	14352	16224	17472
32	tRCD low	0xC8	0x26	0xBA	0xA2	0x70	0x3E	0x10	0x60	0x40
33	tRCD high	0x37	0x40	0x45	0x36	0x3E	0x46	0x38	0x3F	0x44

SPD #										
	tRP (ps)	14280	16422	17850	13986	15984	17982	14352	16224	17472
34	tRP low	0xC8	0x26	0xBA	0xA2	0x70	0x3E	0x10	0x60	0x40
35	tRP high	0x37	0x40	0x45	0x36	0x3E	0x46	0x38	0x3F	0x44

SPD #										
	tRAS (ps)	32000	32000	32000	32000	32000	32000	32000	32000	32000
36	tRAS low	0x00	0x00	0x00	0x00	0x00	0x00	0x00	0x00	0x00
37	tRAS high	0x7D	0x7D	0x7D	0x7D	0x7D	0x7D	0x7D	0x7D	0x7D

SPD #										
	tRC (ps)	46286	48429	49857	46000	48000	50000	46375	48250	49500
38	tRC low	0xCE	0x2D	0xC1	0xB0	0x80	0x50	0x27	0x7A	0x5C
39	tRC high	0xB4	0xBD	0xC2	0xB3	0xBB	0xC3	0xB5	0xBC	0xC1

SPD #										
	tWR (ps)	0	0	0	0	0	0	0	0	0
40	tWR low	0x00	0x00	0x00	0x00	0x00	0x00	0x00	0x00	0x00
41	tWR high	0x75	0x75	0x75	0x75	0x75	0x75	0x00	0x00	0x00

CAS Latency Masks, DDR5 Monolithic and DDP SDRAMs

Optional downbins are included. Optional CAS latencies are not included.

Mono Speed Bin	SPD[24]	SPD[25]	SPD[26]	SPD[27]	SPD[28]
3200A	1A	0	0	0	0
3200B	1A	0	0	0	0
3200C	12	0	0	0	0
3600A	7A	0	0	0	0
3600B	72	0	0	0	0
3600C	42	0	0	0	0
4000A	7A	1	0	0	0
4000B	7A	1	0	0	0
4000C	42	1	0	0	0
4400A	7A	5	0	0	0
4400B	72	5	0	0	0
4400C	42	5	0	0	0
4800A	FA	D	0	0	0
4800B	72	D	0	0	0
4800C	52	D	0	0	0
5200A	7A	6F	0	0	0
5200B	7A	6D	0	0	0
5200C	42	65	0	0	0
5600A	7A	EF	1	0	0
5600B	72	ED	1	0	0
5600C	42	C5	1	0	0
6000A	FA	EF	7	0	0
6000B	7A	ED	7	0	0
6000C	42	45	7	0	0
6400A	7A	ED	7	0	0
6400B	7A	AD	7	0	0
6400C	52	AD	6	0	0

Parameters Defined by Device Density, DDR5 Monolithic and DDP SDRAMs

	SPD #	43	42
	ns	MSB	LSB
tRFC1, 8Gb	195	0x00	0xC3
tRFC1, 16Gb	295	0x01	0x27
tRFC1, 24Gb			
tRFC1, 32Gb			

	SPD #	45	44
	ns	MSB	LSB
tRFC2, 8Gb	130	0x00	0x82
tRFC2, 16Gb	160	0x00	0xA0
tRFC2, 24Gb			
tRFC2, 32Gb			

	SPD #	47	46
	ns	MSB	LSB
tRFCsb, 8Gb	115	0x00	0x73
tRFCsb, 16Gb	130	0x00	0x82
tRFCsb, 24Gb			
tRFCsb, 32Gb			

PROPOSED

PROPOSED

Core parameters, DDR5 3DS SDRAMs

	3200A 3DS	3200B 3DS	3200C 3DS	3600A 3DS	3600B 3DS	3600C 3DS	4000A 3DS	4000B 3DS	4000C 3DS
tCKmin	0.625	0.625	0.625	0.555	0.555	0.555	0.500	0.500	0.500
tCKmax	1.000	1.000	1.000	1.000	1.000	1.000	1.000	1.000	1.000
tAA	16.250	18.750	20.000	16.650	18.870	19.980	16.000	19.000	20.000
tRCD	13.750	16.250	17.500	14.430	16.650	17.760	14.000	16.000	18.000
tRP	13.750	16.250	17.500	14.430	16.650	17.760	14.000	16.000	18.000
tRAS	32.000	32.000	32.000	32.000	32.000	32.000	32.000	32.000	32.000
tRC	45.750	48.250	49.500	46.430	48.650	49.760	46.000	48.500	50.000
tWR	30.000	30.000	30.000	30.000	30.000	30.000	30.000	30.000	30.000

SPD #										
	tCKmin (ps)	625	625	625	555	555	555	500	500	500
20	tCKmin low	0x71	0x71	0x71	0x2B	0x2B	0x2B	0xF4	0xF4	0xF4
21	tCKmin high	0x02	0x02	0x02	0x02	0x02	0x02	0x01	0x01	0x01
SPD #										
	tCKmax (ps)	1000	1000	1000	1000	1000	1000	1000	1000	1000
22	tCKmax low	0xE8	0xE8	0xE8	0xE8	0xE8	0xE8	0xE8	0xE8	0xE8
23	tCKmax high	0x03	0x03	0x03	0x03	0x03	0x03	0x03	0x03	0x03
SPD #										
	tAA (ps)	16250	18750	20000	16650	18870	19980	16000	19000	20000
30	tAA low	0x7A	0x3E	0x20	0x0A	0xB6	0x0C	0x80	0x38	0x20
31	tAA high	0x3F	0x49	0x4E	0x41	0x49	0x4E	0x3E	0x4A	0x4E
SPD #										
	tRCD (ps)	13750	16250	17500	14430	16650	17760	14000	16000	18000
32	tRCD low	0xB6	0x7A	0x5C	0x5E	0x0A	0x60	0xB0	0x80	0x50
33	tRCD high	0x35	0x3F	0x44	0x38	0x41	0x45	0x36	0x3E	0x46
SPD #										
	tRP (ps)	13750	16250	17500	14430	16650	17760	14000	16000	18000
34	tRP low	0xB6	0x7A	0x5C	0x5E	0x0A	0x60	0xB0	0x80	0x50
35	tRP high	0x35	0x3F	0x44	0x38	0x41	0x45	0x36	0x3E	0x46
SPD #										
	tRAS (ps)	32000	32000	32000	32000	32000	32000	32000	32000	32000
36	tRAS low	0x00	0x00	0x00	0x00	0x00	0x00	0x00	0x00	0x00
37	tRAS high	0x7D	0x7D	0x7D	0x7D	0x7D	0x7D	0x7D	0x7D	0x7D
SPD #										
	tRC (ps)	45750	48250	49500	46430	48650	49760	46000	48500	50000
38	tRC low	0xB6	0x7A	0x5C	0x5E	0x0A	0x60	0xB0	0x74	0x50
39	tRC high	0xB2	0xBC	0xC1	0xB5	0xBE	0xC2	0xB3	0xBD	0xC3
SPD #										
	tWR (ps)	30000	30000	30000	30000	30000	30000	30000	30000	30000
40	tWR low	0x30	0x30	0x30	0x30	0x30	0x30	0x30	0x30	0x30
41	tWR high	0x75	0x75	0x75	0x75	0x75	0x75	0x75	0x75	0x75

PROPOSED

	4400A 3DS	4400B 3DS	4400C 3DS	4800A 3DS	4800B 3DS	4800C 3DS	5200A 3DS	5200B 3DS	5200C 3DS
tCKmin	0.454	0.454	0.454	0.416	0.416	0.416	0.384	0.384	0.384
tCKmax	1.000	1.000	1.000	1.000	1.000	1.000	1.000	1.000	1.000
tAA	16.344	19.068	19.976	16.640	19.136	19.968	16.896	18.432	19.968
tRCD	14.528	16.344	18.160	14.144	16.640	17.472	14.592	16.128	17.664
tRP	14.528	16.344	18.160	14.144	16.640	17.472	14.592	16.128	17.664
tRAS	32.000	32.000	32.000	32.000	32.000	32.000	32.000	32.000	32.000
tRC	46.528	48.344	50.160	46.144	49.472	49.472	46.615	48.154	49.692
tWR	30.000	30.000	30.000	30.000	30.000	30.000	30.000	30.000	30.000

SPD #										
	tCK (ps)	454	454	454	416	416	416	384	384	384
20	tCK low	0xC6	0xC6	0xC6	0xA0	0xA0	0xA0	0x80	0x80	0x80
21	tCK high	0x01	0x01	0x01	0x01	0x01	0x01	0x01	0x01	0x01

SPD #										
	tCKmax (ps)	1000	1000	1000	1000	1000	1000	1000	1000	1000
22	tCKmax low	0xE8	0xE8	0xE8	0xE8	0xE8	0xE8	0xE8	0xE8	0xE8
23	tCKmax high	0x03	0x03	0x03	0x03	0x03	0x03	0x03	0x03	0x03

SPD #										
	tAA (ps)	16344	19068	19976	16640	19136	19968	16896	18432	19968
30	tAA low	0xD8	0x7C	0x08	0x00	0xC0	0x00	0x00	0x00	0x00
31	tAA high	0x3F	0x4A	0x4E	0x41	0x4A	0x4E	0x42	0x48	0x4E

SPD #										
	tRCD (ps)	14528	16344	18160	14144	16640	17472	14592	16128	17664
32	tRCD low	0xC0	0xD8	0xF0	0x40	0x00	0x40	0x00	0x00	0x00
33	tRCD high	0x38	0x3F	0x46	0x37	0x41	0x44	0x39	0x3F	0x45

SPD #										
	tRP (ps)	14528	16344	18160	14144	16640	17472	14592	16128	17664
34	tRP low	0xC0	0xD8	0xF0	0x40	0x00	0x40	0x00	0x00	0x00
35	tRP high	0x38	0x3F	0x46	0x37	0x41	0x44	0x39	0x3F	0x45

SPD #										
	tRAS (ps)	32000	32000	32000	32000	32000	32000	32000	32000	32000
36	tRAS low	0x00	0x00	0x00	0x00	0x00	0x00	0x00	0x00	0x00
37	tRAS high	0x7D	0x7D	0x7D	0x7D	0x7D	0x7D	0x7D	0x7D	0x7D

SPD #										
	tRC (ps)	46528	48344	50160	46144	49472	49472	46615	48154	49692
38	tRC low	0xC0	0xD8	0xF0	0x40	0x40	0x40	0x17	0x1A	0x1C
39	tRC high	0xB5	0xBC	0xC3	0xB4	0xC1	0xC1	0xB6	0xBC	0xC2

SPD #										
	tWR (ps)	30000	30000	30000	30000	30000	30000	30000	30000	30000
40	tWR low	0x30	0x30	0x30	0x30	0x30	0x30	0x30	0x30	0x30
41	tWR high	0x75	0x75	0x75	0x75	0x75	0x75	0x75	0x75	0x75

PROPOSED

		5600A 3DS	5600B 3DS	5600C 3DS	6000A 3DS	6000B 3DS	6000C 3DS	6400A 3DS	6400B 3DS	6400C 3DS
	tCKmin	0.357	0.357	0.357	0.333	0.333	0.333	0.312	0.312	0.312
	tCKmax	1.000	1.000	1.000	1.000	1.000	1.000	1.000	1.000	1.000
	tAA	16.422	18.564	19.992	16.650	18.648	19.980	16.244	18.720	19.968
	tRCD	14.280	16.422	17.850	13.986	15.984	17.982	14.352	16.224	17.472
	tRP	14.280	16.422	17.850	13.986	15.984	17.982	14.352	16.224	17.472
	tRAS	32.000	32.000	32.000	32.000	32.000	32.000	32.000	32.000	32.000
	tRC	46.286	48.429	49.857	46.000	48.000	50.000	46.375	48.250	49.500
	tWR	30.000	30.000	30.000	30.000	30.000	30.000	30.000	30.000	30.000
SPD #	tCK (ps)	357	357	357	333	333	333	312	312	312
20	tCK low	0x65	0x65	0x65	0x4D	0x4D	0x4D	0x38	0x38	0x38
21	tCK high	0x01	0x01	0x01	0x01	0x01	0x01	0x01	0x01	0x01
SPD #	tCKmax (ps)	1000	1000	1000	1000	1000	1000	1000	1000	1000
22	tCKmax low	0xE8	0xE8	0xE8	0xE8	0xE8	0xE8	0xE8	0xE8	0xE8
23	tCKmax high	0x03	0x03	0x03	0x03	0x03	0x03	0x03	0x03	0x03
SPD #	tAA (ps)	16422	18564	19992	16650	18648	19980	16244	18720	19968
30	tAA low	0x26	0x84	0x18	0x0A	0xD8	0x0C	0x74	0x20	0x00
31	tAA high	0x40	0x48	0x4E	0x41	0x48	0x4E	0x3F	0x49	0x4E
SPD #	tRCD (ps)	14280	16422	17850	13986	15984	17982	14352	16224	17472
32	tRCD low	0xC8	0x26	0xBA	0xA2	0x70	0x3E	0x10	0x60	0x40
33	tRCD high	0x37	0x40	0x45	0x36	0x3E	0x46	0x38	0x3F	0x44
SPD #	tRP (ps)	14280	16422	17850	13986	15984	17982	14352	16224	17472
34	tRP low	0xC8	0x26	0xBA	0xA2	0x70	0x3E	0x10	0x60	0x40
35	tRP high	0x37	0x40	0x45	0x36	0x3E	0x46	0x38	0x3F	0x44
SPD #	tRAS (ps)	32000	32000	32000	32000	32000	32000	32000	32000	32000
36	tRAS low	0x00	0x00	0x00	0x00	0x00	0x00	0x00	0x00	0x00
37	tRAS high	0x7D	0x7D	0x7D	0x7D	0x7D	0x7D	0x7D	0x7D	0x7D
SPD #	tRC (ps)	46286	48429	49857	46000	48000	50000	46375	48250	49500
38	tRC low	0xCE	0x2D	0xC1	0xB0	0x80	0x50	0x27	0x7A	0x5C
39	tRC high	0xB4	0xBD	0xC2	0xB3	0xBB	0xC3	0xB5	0xBC	0xC1
SPD #	tWR (ps)	30000	30000	30000	30000	30000	30000	30000	30000	30000
40	tWR low	0x30	0x30	0x30	0x30	0x30	0x30	0x30	0x30	0x30
41	tWR high	0x75	0x75	0x75	0x75	0x75	0x75	0x75	0x75	0x75

PROPOSED

CAS Latency Masks, DDR5 3DS SDRAMs

Optional downbins are included. Optional CAS latencies are not included.

3DS Speed Bin	SPD[24]	SPD[25]	SPD[26]	SPD[27]	SPD[28]
3200A 3DS	6A	0	0	0	0
3200B 3DS	62	0	0	0	0
3200C 3DS	42	0	0	0	0
3600A 3DS	E2	1	0	0	0
3600B 3DS	C2	1	0	0	0
3600C 3DS	82	1	0	0	0
4000A 3DS	E2	7	0	0	0
4000B 3DS	C2	7	0	0	0
4000C 3DS	82	6	0	0	0
4400A 3DS	A2	F	0	0	0
4400B 3DS	42	1F	0	0	0
4400C 3DS	82	1E	0	0	0
4800A 3DS	E2	7F	0	0	0
4800B 3DS	42	75	0	0	0
4800C 3DS	42	55	0	0	0
5200A 3DS	E2	7F	1	0	0
5200B 3DS	E2	7D	1	0	0
5600A 3DS	E2	7F	5	0	0
5600B 3DS	C2	77	5	0	0
5600C 3DS	82	16	5	0	0
6000A 3DS	E2	FF	15	0	0
6000B 3DS	C2	FF	15	0	0
6000C 3DS	82	16	15	0	0
6400A 3DS	E2	7F	55	0	0
6400B 3DS	E2	7D	55	0	0
6400C 3DS	42	55	55	0	0

Parameters Defined by Device Density, DDR5 3DS SDRAMs

	SPD #	43	42
	ns	MSB	LSB
tRFC1_slr, 8Gb	195.000	0x00	0xC3
tRFC1_slr, 16Gb	295.000	0x01	0x27
tRFC1_slr, 24Gb			
tRFC1_slr, 32Gb			

	SPD #	45	44
	ns	MSB	LSB
tRFC2_slr, 8Gb	130.000	0x00	0x82
tRFC2_slr, 16Gb	160.000	0x00	0xA0
tRFC2_slr, 24Gb			
tRFC2_slr, 32Gb			

	SPD #	47	46
	ns	MSB	LSB
tRFCsb_slr, 8Gb	115.000	0x00	0x73
tRFCsb_slr, 16Gb	130.000	0x00	0x82
tRFCsb_slr, 24Gb			
tRFCsb_slr, 32Gb			

	SPD #	49	48
	ns	MSB	LSB
tRFC1_dlr 3DS, 8Gb	65.000	0x00	0x41
tRFC1_dlr 3DS, 16Gb	98.333	0x00	0x62
tRFC1_dlr 3DS, 24Gb			
tRFC1_dlr 3DS, 32Gb			

	SPD #	51	50
	ns	MSB	LSB
tRFC2_dlr 3DS, 8Gb	43.333	0x00	0x2B
tRFC2_dlr 3DS, 16Gb	53.333	0x00	0x35
tRFC2_dlr 3DS, 24Gb			
tRFC2_dlr 3DS, 32Gb			

	SPD #	53	52
	ns	MSB	LSB
tRFCsb_dlr 3DS, 8Gb	38.333	0x00	0x26
tRFCsb_dlr 3DS, 16Gb	43.333	0x00	0x2B
tRFCsb_dlr 3DS, 24Gb			
tRFCsb_dlr 3DS, 32Gb			

PROPOSED

PROPOSED

1.0 Blocks 3~6: Module-Specific Section: Bytes 192~447 (0x0C0~0x1BF)

This section contains SPD bytes which are specific to families DDR5 module families. Module Type Key Byte 3 is used as an index for the encoding of bytes 192~447. The content of bytes 192~447 are described in multiple annexes, one for each memory module family. These bytes are write protected.

2.0 Blocks 8~9: Module Supplier's Data: Bytes 512~639 (0x200~0x27F)

These blocks of the SPD contain information specific to the memory module assembly including module manufacturer ID, manufacturing location, and module part number. These bytes are write protected.

3.0 Blocks 10~15: End User Programmable, Bytes 640~1023 (0x280~0x3FF)

These blocks of the SPD are not write protected so that end users may program any values into these bytes during system runtime or for system management.

PROPOSED

Annex A.0: Common SPD Bytes for All Module Types (Bytes 192~447, 0x0C0~0x1BF)

This section describes SPD bytes that are common to all module types. Some bytes, as indicated in the table, are documented in separate annexes for each module type:

- A.1: Solder Down
- A.2: Unbuffered DIMMs (UDIMM)
- A.3: Registered DIMMs (RDIMM)
- A.4: Load Reduced DIMMs (LRDIMM)
- A.5: Differential DIMMs (DDIMM)
- A.6: Non-Volatile DIMMs, -N (NVDIMM-N)
- A.7: Non-Volatile DIMMs, -Px (NVDIMM-Px)

SPD Bytes Common to All Module Types		
Byte Number		Function Described
192	0x0C0	SPD Revision for SPD bytes 192~447
193	0x0C1	Reserved
194	0x0C2	SPD Manufacturer ID Code, First Byte
195	0x0C3	SPD Manufacturer ID Code, Second Byte
196	0x0C4	SPD Device Type
197	0x0C5	SPD Device Revision Number
198	0x0C6	PMIC 0 Manufacturer ID Code, First Byte
199	0x0C7	PMIC 0 Manufacturer ID Code, Second Byte
200	0x0C8	PMIC 0 Device Type
201	0x0C9	PMIC 0 Revision Number
202	0x0CA	PMIC 1 Manufacturer ID Code, First Byte
203	0x0CB	PMIC 1 Manufacturer ID Code, Second Byte
204	0x0CC	PMIC 1 Device Type
205	0x0CD	PMIC 1 Revision Number
206	0x0CE	PMIC 2 Manufacturer ID Code, First Byte
207	0x0CF	PMIC 2 Manufacturer ID Code, Second Byte
208	0x0D0	PMIC 2 Device Type
209	0x0D1	PMIC 2 Revision Number
210	0x0D2	Thermal Sensor Manufacturer ID Code, First Byte
211	0x0D3	Thermal Sensor Manufacturer ID Code, Second Byte
212	0x0D4	Thermal Sensor Device Type
213	0x0D5	Thermal Sensor Revision Number
214~229	0x0D6~0x0E5	Reserved
230	0x0E6	Module Nominal Height
231	0x0E7	Module Maximum Thickness
232	0x0E8	Reference Raw Card Used
233	0x0E9	DIMM Attributes

PROPOSED

SPD Bytes Common to All Module Types		
Byte Number		Function Described
234	0x0EA	Module Organization
235	0x0EB	Memory Channel Bus Width
236~239	0x0EC~0x0EF	Reserved
240~445	0x0F0~0x1BD	Module Type Specific Information. These SPD bytes are unique to each module type. See the appropriate annex for the module.
446	0x1BE	CRC for SPD Bytes 192~447, Least Significant Byte
447	0x1BF	CRC for SPD Bytes 192~447, Most Significant Byte

(Common): SPD Revision for Module Information Byte 192 (0x0C0)

This byte defines the SPD revision for bytes 192~447. See SPD byte 1 for details.

(Common): Reserved Byte 193 (0x0C1)

Reserved. Must be coded as 0x00.

(Common): Module Device Information Bytes 194~221 (0x0C2~0x0DD)

This table lists the SPD byte addresses for the key components on this assembly.

Module Generic Device Information								
Device	Manufacturer ID Code, First Byte		Manufacturer ID Code, Second Byte		Device Type		Device Revision	
	Dec	Hex	Dec	Hex	Dec	Hex	Dec	Hex
SPD	194	0x0C2	195	0x0C3	196	0x0C4	197	0x0C5
PMIC 0	198	0x0C6	199	0x0C7	200	0x0C8	201	0x0C9
PMIC 1	202	0x0CA	203	0x0CB	204	0x0CC	205	0x0CD
PMIC 2	206	0x0CE	207	0x0CF	208	0x0D0	209	0x0D1
Thermal Sensors (TS)	210	0x0D2	211	0x0D3	212	0x0D4	213	0x0D5
Notes: SPD = Serial Presence Detect PMIC = Power Management Integrated Circuit								

Manufacturer ID Code: Per JEP106. See SPD bytes 512~513 for an example.

Device types:

PROPOSED

Device Types				
	Bit 7	Bit 6	Bits 5 ~ 4	Bits 3 ~ 0
Device	Devices Installed		Reserved	Device Type
SPD	0 = Not installed 1 = Installed	Reserved; must be coded as 0	Reserved. Must be coded as 00	0000: SPD5118 (see JESD300-5) 0001: SPD5108 (see JESD300-5) All other codes reserved
PMIC 0	0 = Not installed 1 = Installed			0000: PMIC5000 (see JESD301-1) 0001: PMIC5010 (see JESD301-1) 0010: PMIC5100 (see JESD301-2) All other codes reserved
PMIC 1	0 = Not installed 1 = Installed			
PMIC 2	0 = Not installed 1 = Installed			
Thermal Sensors	0 = TS0 Not installed 1 = TS Installed	0 = TS1 Not installed 1 = TS1 Installed		0000: TS5111 (see JESD302-1) 0001: TS5110 (see JESD302-1) All other codes reserved

Device revision: This byte is coded as a major revision in bits 7~4 and minor revision in bits 3~0, each nibble expressed in BCD. For example, device stepping 3.2 would be coded as 0x32.

(Common): Module Nominal Height
Byte 230 (0x0E6)

This byte defines the nominal height (A dimension) in millimeters of the fully assembled module including heat spreaders or other added components. Refer to the relevant JEDEC JC-11 module outline (MO) documents for dimension definitions.

Module Nominal Height	
Bits 7~5	Bits 4~0
Reserved	Module Nominal Height max, in mm (baseline height = 15 mm)
Reserved; must be coded as 000	00000 = height ≤ 15 mm 00001 = 15 < height ≤ 16 mm 00010 = 16 < height ≤ 17 mm 00011 = 17 < height ≤ 18 mm 00100 = 18 < height ≤ 19 mm ... 01010 = 24 < height ≤ 25 mm 01011 = 25 < height ≤ 26 mm ... 01111 = 29 < height ≤ 30 mm 10000 = 30 < height ≤ 31 mm 10001 = 31 < height ≤ 32 mm ... 11111 = 45 mm < height

PROPOSED

Examples:

Nominal Module Height	Coding, bits 4 ~ 0	Meaning
mm	Binary	mm
18.75	00100	18 < height ≤ 19 mm
25.40	01011	25 < height ≤ 26 mm
30.00	01111	29 < height ≤ 30 mm
30.25	10000	30 < height ≤ 31 mm
31.25	10001	31 < height ≤ 32 mm

(Common): Module Maximum Thickness Byte 231 (0x0E7)

This byte defines the maximum thickness in millimeters of the fully assembled module including heat spreaders or other added components above the module circuit board surface, rounding up to the next integer. Refer to the relevant JEDEC JC-11 module outline (MO) documents for dimension definitions.

Module Maximum Thickness	
Bits 7 ~ 4	Bits 3 ~ 0
Module Maximum Thickness max, Back, in mm (baseline thickness = 1 mm)	Module Maximum Thickness max, Front, in mm (baseline thickness = 1 mm)
0000 = thickness ≤ 1 mm 0001 = 1 < thickness ≤ 2 mm 0010 = 2 < thickness ≤ 3 mm 0011 = 3 < thickness ≤ 4 mm ... 1110 = 14 < thickness ≤ 15 mm 1111 = 15 < thickness	0000 = thickness ≤ 1 mm 0001 = 1 < thickness ≤ 2 mm 0010 = 2 < thickness ≤ 3 mm 0011 = 3 < thickness ≤ 4 mm ... 1110 = 14 < thickness ≤ 15 mm 1111 = 15 < thickness

PROPOSED

(Common): Reference Raw Card Used
Byte 232 (0x0E8)

This byte indicates which JEDEC reference design raw card was used as the basis for the module assembly, if any. Special reference raw card indicator, ZZ, is used when no JEDEC standard raw card reference design was used as the basis for the module design. Pre-production modules should be encoded as revision 0 in bits 7~5.

Reference Raw Card Used	
Bit 7~5	**Bits 4~0**
Design Revision	**Reference Design**
000 = Revision 0 001 = Revision 1 010 = Revision 2 011 = Revision 3 100 = Revision 4 101 = Revision 5 110 = Revision 6 111 = Reserved	00000 = A 00001 = B 00010 = C 00011 = D 00100 = E 00101 = F 00110 = G 00111 = H 01000 = J 01001 = K 01010 = L 01011 = M 01100 = N 01101 = P 01110 = R 01111 = T 10000 = U 10001 = V 10010 = W 10011 = Y 10100 = AA 10101 = AB 10110 = AC 10111 = AD 11000 = AE 11001 = AF 11010 = AG 11011 = AH 11100 = AJ 11101 = AK 11110 = Reserved 11111 = ZZ (No reference used)
11111111 = ZZ (no JEDEC reference raw card design used)	

PROPOSED

(Common): DIMM Attributes
Byte 233 (0x0E9)

This byte indicates the number of rows of DRAM packages (monolithic or 3D stacked) parallel to edge connector (independent of DRAM orientation) on each side of the printed circuit board, and whether the assembly is covered in a heat spreader. The temperature grade applies to all components on the assembly.

DIMM Attributes			
Bits 7~4	**Bit 3**	**Bit 2**	**Bits 1~0**
Temperature Grade[1]	**Reserved**	**Heat Spreader**	**# of rows of DRAMs on Module**
0000 = A1T, Automotive Grade 1 (-40 to +125 °C) 0001 = A2T, Automotive Grade 2 (-40 to +105 °C) 0010 = A3T, Automotive Grade 3 (-40 to +85 °C) 0011 = IT, Industrial Grade (-40 to +90 °C) 0100 = ST, Standard Grade (-25 to +85 °C) 0101 = ET, Elevated Grade (-25 to +105 °C) 0110 = RT, Reduced Grade (0 to +45 °C) 0111 = NT, Normal Grade (0 to +85 °C) 1000 = XT, Extended Grade (0 to +95 °C)[2] All other codings reserved	Reserved; must be coded as 0	0 = Not installed 1 = Installed	00 = Undefined 01 = 1 row 10 = 2 rows 11 = Reserved
Notes: 1. See JESD402-1 for details 2. Typical standard DDR5 SDRAM thermal specification is XT, 0 to +95 °C, code 1000 in bits 7~4			

(Common): Module Organization
Byte 234 (0x0EA)

This byte describes the organization of the SDRAM module. Bits 5~3 encode the number of package ranks on the module. Bit 6 describes whether the assembly has the same SDRAM density on all ranks or has different SDRAM densities on even and odd ranks.

Module Organization			
Bit 7	**Bit 6**	**Bits 5~3**	**Bits 2~0**
Reserved	**Rank Mix**	**Number of Package Ranks per Channel**	**Reserved**
Reserved; must be coded as 0	0 = Symmetrical 1 = Asymmetrical	Bit [5, 4, 3] : 000 = 1 Package Rank 001 = 2 Package Ranks 010 = 3 Package Ranks 011 = 4 Package Ranks 100 = 5 Package Ranks 101 = 6 Package Ranks 110 = 7 Package Ranks 111 = 8 Package Ranks	Reserved; must be coded as 000

“Package ranks per DIMM” refers to the collections of devices on the module sharing common chip select signals (across the data width of the DIMM channel), either from the edge connector for

unbuffered modules or from the outputs of a registering clock driver for RDIMMs and LRDIMMs.

"Logical rank" refers the individually addressable die in a 3DS stack and has no meaning for monolithic SDRAMs, however, for the purposes of calculating the capacity of the module, one should treat monolithic SDRAMs as having one logical rank per package rank.

Byte 242 Bit 6 = 0 defines a memory module as being "symmetrical" where all SDRAM devices on the module are "First SDRAM" type per SPD bytes 4~7.

Examples shown cover 1 and 2 rank modules, i.e., codes 000 or 001 in SPD byte 234 bits 5~3; for higher package rank counts, apply the same logic.

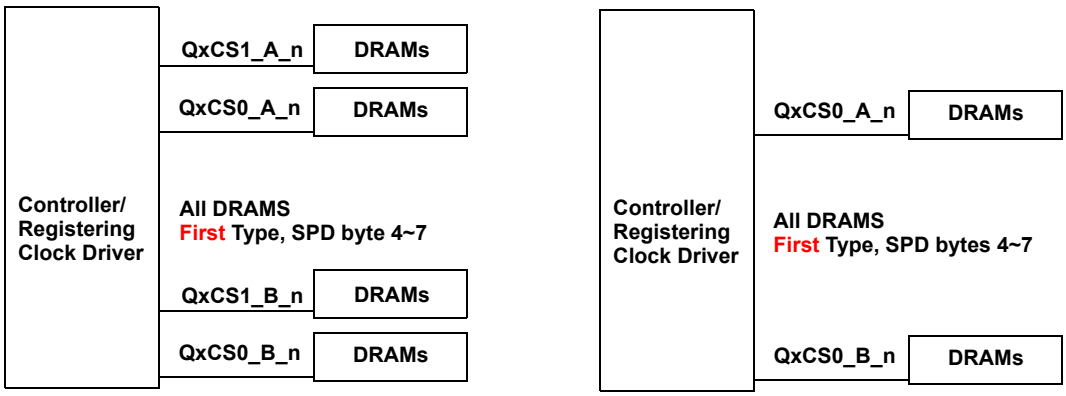

Symmetrical Configurations (byte 234 Bit 6 = 0)

Rank Matrix for Symmetrical Modules (Byte 234 Bit 6 = 0)		
SDRAM Package Type	**# Package Ranks per Channel**	**# Logical Ranks per Channel**
SPD Byte 4 Bits 7~5	**SPD Byte 234 Bits 5~3**	**Calculated**
SDP	1	1
	2	2
2H 3DS	1	2
	2	4
4H 3DS	1	4
	2	8
8H 3DS	1	8
	2	16
16H 3DS	1	16
	2	32
Logical Ranks per Channel = # Package Ranks per Channel * # Logical Ranks per Package Rank Bytes 8~10 coded as 0x00 for all symmetrical configurations		

Byte 234 Bit 6 = 1 defines a memory module as being "asymmetrical", where all DRAMs in even package ranks (0, 2, 4, 6) are of "First SDRAM" type per SPD bytes 4~7, and all DRAMs in odd package ranks (1, 3, 5, 7) are of "Second SDRAM" type as described in SPD bytes 8~11.

The example shown covers the case of a 2 rank module, i.e., code 001 in SPD byte 234 bits 5~3; for higher package rank counts, apply the same logic for even (Primary) and odd (Secondary)

PROPOSED

ranks.

The I/O width of all ranks (SPD byte 6 bits 7~5 and SPD byte 10 bits 7~5) in an asymmetrical assembly must be the same, e.g., all x4 or all x8.

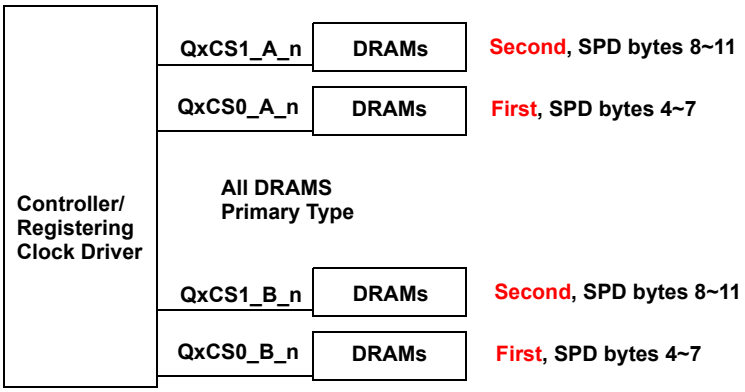

Asymmetrical Configurations (byte 234 Bit 6 = 1)

Rank Mix for Asymmetrical Modules (Byte 242 Bit 6 = 1)			
First SDRAM PackageType	**Second SDRAM Package Type**	**# Package Ranks per Channel**	**# Logical Ranks per Channel**
SPD Byte 4 Bits 7~5	**SPD Byte 8 Bits 7~5**	**SPD Byte 234 Bits 5~3**	**Calculated**
SDP	DDP	2	3
DDP	SDP	2	3
SDP	2H 3DS	2	3
2H 3DS	SDP	2	3
SDP	4H 3DS	2	5
4H 3DS	SDP	2	5
...	...	...	...
8H 3DS	16H 3DS	2	24
16H 3DS	8H 3DS	2	24
Logical Ranks per DIMM = # Logical Ranks in Primary SDRAM type + # Logical Ranks in Secondary SDRAM type			

PROPOSED

PROPOSED

(Common): Memory Channel Bus Width
Byte 235 (0x0F3)

This byte describes the width of the SDRAM memory bus on the module. Bits 2~0 encode the primary bus width. Bits 4~3 encode the bus extensions such as parity or ECC. Bits 6~5 defines the number of channels on each module.

Memory Channel Bus Width			
Bit 7	**Bits 6~5**	**Bits 4~3**	**Bits 2~0**
Reserved	**Number of Channels per DIMM**	**Bus width extension per Channel, in bits**	**Primary bus width per Channel, in bits**
Reserved; must be coded as 0	Bit [6, 5] : 00 = 1 channel 01 = 2 channels All others reserved	Bit [4, 3] : 00 = 0 bits (no extension) 01 = 4 bits 10 = 8 bits All others reserved	Bit [2, 1, 0] : 000 = 8 bits 001 = 16 bits 010 = 32 bits 011 = 64 bits All others reserved

Examples:

Number of Channels Per DIMM	Primary Bus Width per Channel	Bus Width Extension Per Bus	Byte 235 Coding	Total Data Width per DIMM	Standard Usage
2	32	0	0 01 00 010	64	SO-DIMM, UDIMM
2	32	4	0 01 01 010	72	ECC SO-DIMM, ECC UDIMM
2	32	8	0 01 10 010	80	RDIMM, LRDIMM, NVDIMM

Calculating Module DRAM Capacity

The total memory capacity of the DRAM on a DIMM may be calculated from SPD values. The following table details the SPD bytes needed for the calculation.

Symmetry	Package Ranks per Channel	SDRAM Density per Die	Die per Package	SDRAM I/O Width	Primary Bus Width per Channel	Number of Channels per DIMM
0 = Symmetrical	All	SPD byte 4 Bits 4~0	SPD byte 4 Bits 7~5	SPD byte 6 Bits 7~5	SPD byte 235 Bits 2~0	SPD byte 235 Bits 6~5
1 = Asymmetrical	Even (0, 2, 4, 6)	SPD byte 4 Bits 4~0	SPD byte 4 Bits 7~5	SPD byte 6 Bits 7~5	SPD byte 235 Bits 2~0	SPD byte 235 Bits 6~5
	Odd (1, 3, 5, 7)	SPD byte 8 Bits 4~0	SPD byte 8 Bits 7~5	SPD byte 10 Bits 7~5	SPD byte 235 Bits 2~0	SPD byte 235 Bits 6~5

To calculate the total capacity in bytes for a symmetric module, the following math applies:

Capacity in bytes =
Number of channels per DIMM *
Primary bus width per channel / SDRAM I/O Width *
Die per package *
SDRAM density per die / 8 *
Package ranks per channel

To calculate the total capacity in bytes for an asymmetric module, the following math applies:

Capacity in bytes =
Capacity of even ranks (first SDRAM type) +
Capacity of odd ranks (second SDRAM type)

Commonly, parity or ECC are not counted in total module capacity, though they can also be included by adding the bus width extension in SPD byte 235 bits 4~3 to the primary bus width in the previous examples.

(Common): Reserved
Bytes 236~239 (0x0EC~0EF)

Reserved -- must be coded as 0x00

(Common): Module Type Specific Information
Bytes 240~445 (0x0F0~0x1BD)

These bytes are specific to each module type. See the appropriate annex for definition.

(Common): Cyclical Redundancy Code (CRC) for SPD Bytes 128~253
Byte 446 (0x1BE): Least Significant Byte
Byte 447 (0x1BF): Most Significant Byte

This two-byte field contains the calculated CRC for bytes 192~445 in the SPD. See bytes 126~127 for coding example.

PROPOSED

PROPOSED

Annex A.1: Module Specific Bytes for Solder Down (Bytes 192~447, 0x0C0~0x1BF)

This section defines the encoding of SPD bytes 192~447 when Memory Technology Key Byte 2 contains the value 0x12 and Module Type Key Byte 3 contains any of the following:

- 0xHB, Solder Down
- where H refers to the hybrid memory architecture, if any present

See Annex A.0 for common SPD bytes 192~239 (0x0C0~0EF).

Module Specific SPD Bytes for Solder Down Memory		
Byte Number		Function Described
240~445	0x0F0~0x1BD	Reserved

Bytes 240~445 (0x0F8~0x1BD) (Solder Down):

Reserved -- must be coded as 0x00.

Annex A.2: Module Specific Bytes for Unbuffered Memory Module Types (Bytes 192~447, 0x0C0~0x1BF)

This section defines the encoding of SPD bytes 192~447 when Memory Technology Key Byte 2 contains the value 0x12 and Module Type Key Byte 3 contains any of the following:

- 0xH2, UDIMM
- 0xH3, SO-DIMM
- where H refers to the hybrid memory architecture, if any present on the module

See Annex A.0 for common SPD bytes 192~239 (0x0C0~0EF).

Module Specific SPD Bytes for Unbuffered Module Types		
Byte Number		Function Described
240~445	0x0F0~0x1BD	Reserved

(Unbuffered): Reserved
Bytes 240~445 (0x0F8~0x1BD)

Reserved -- must be coded as 0x00.

PROPOSED

PROPOSED

Annex A.3: Module Specific Bytes for Registered Memory Module Types (Bytes 192~447, 0x0C0~0x1BF)

This section defines the encoding of SPD bytes 192~447 when Memory Technology Key Byte 2 contains the value 0x12 and Module Type Key Byte 3 contains any of the following:

- 0xH1, RDIMM
- 0xH8, SO-RDIMM
- where H refers to the hybrid memory architecture, if any present on the module

See Annex A.0 for common SPD bytes 192~239 (0x0C0~0EF).

Module Specific SPD Bytes for Registered Module Types		
Byte Number		Function Described
240	0x0F0	Registering Clock Driver Manufacturer ID Code, First Byte
241	0x0F1	Registering Clock Driver Manufacturer ID Code, Second Byte
242	0x0F2	Register Device Type
243	0x0F3	Register Revision Number
246~445	0x0F6~0x1BD	Reserved

(Registered): Module Specific Device Information Bytes 240~243 (0x0F0~0x0F3)

This table lists the SPD byte addresses for the key components on this assembly.

Module Specific Device Information								
Device	Manufacturer ID Code, First Byte		Manufacturer ID Code, Second Byte		Device Type		Device Revision	
	Dec	Hex	Dec	Hex	Dec	Hex	Dec	Hex
Registering Clock Driver (RCD)	240	0x0F0	241	0x0F1	242	0x0F2	243	0x0F3

Manufacturer ID Code: Per JEP106. See SPD bytes 512~513 for an example.

Device types:

Module Specific Device Types				
	Bit 7	Bit 6	Bits 5 ~ 4	Bits 3 ~ 0
Registering Clock Driver (RCD)	0 = Not installed 1 = Installed	Reserved; must be coded as 0	Reserved. Must be coded as 00	0000: DDR5RCD01 (see JESD82-511) All other codes reserved

Module Specific Device Types				
Device	**Devices Installed**		**Reserved**	**Device Type**
Registering Clock Driver (RCD)	0 = Not installed 1 = Installed	Reserved; must be coded as 0	Reserved. Must be coded as 00	0000: DDR5RCD01 (see JESD82-511) All other codes reserved

Device revision: This byte is coded as a major revision in bits 7~4 and minor revision in bits 3~0, each nibble expressed in BCD. For example, device stepping 3.2 would be coded as 0x32.

(Registered): Reserved
Bytes 244~445 (0x0F4~0x1BD)

Reserved -- must be coded as 0x00

PROPOSED

PROPOSED

Annex A.4: Module Specific Bytes for Load Reduced Memory Module Types (Bytes 192~447, 0x0C0~0x1BF)

This section defines the encoding of SPD bytes 192~447 when Memory Technology Key Byte 2 contains the value 0x0C and Module Type Key Byte 3 contains any of the following:

- 0x04, LRDIMM

See Annex A.0 for common SPD bytes 192~239 (0x0C0~0EF).

Module Specific SPD Bytes for Load Reduced Module Types		
Byte Number		Function Described
240	0x0F0	Registering Clock Driver Manufacturer ID Code, First Byte
241	0x0F1	Registering Clock Driver Manufacturer ID Code, Second Byte
242	0x0F2	Register Device Type
243	0x0F3	Register Revision Number
244	0x0F4	Data Buffer Manufacturer ID Code, First Byte
245	0x0F5	Data Buffer Manufacturer ID Code, Second Byte
246	0x0F6	Data Buffer Device Type
247	0x0F7	Data Buffer Revision Number
248~445	0x0F8~0x1BD	Reserved

(Load Reduced): Module Specific Device Information Bytes 240~247 (0x0F0~0x0F7)

This table lists the SPD byte addresses for the key components on this assembly.

Module Specific Device Information								
Device	Manufacturer ID Code, First Byte		Manufacturer ID Code, Second Byte		Device Type		Device Revision	
	Dec	Hex	Dec	Hex	Dec	Hex	Dec	Hex
Registering Clock Driver (RCD)	240	0x0F0	241	0x0F1	242	0x0F2	243	0x0F3
Data Buffers (DB)	244	0x0F4	245	0x0F5	246	0x0F6	247	0x0F7

Manufacturer ID Code: Per JEP106. See SPD bytes 512~513 for an example.

Device types:

Module Specific Device Types				
	Bit 7	Bit 6	Bits 5 ~ 4	Bits 3 ~ 0
Device	Devices Installed		Reserved	Device Type
Registering Clock Driver (RCD)	0 = Not installed 1 = Installed	Reserved; must be coded as 0	Reserved. Must be coded as 00	0000: DDR5RCD01 (see JESD82-511) All other codes reserved
Data Buffers (DB)	0 = Not installed 1 = Installed			0000: DDR5DB01 (see JESD82-521) All other codes reserved

Device revision: This byte is coded as a major revision in bits 7~4 and minor revision in bits 3~0, each nibble expressed in BCD. For example, device stepping 3.2 would be coded as 0x32.

(Load Reduced): Reserved Bytes 248~445 (0x0F8~1BD)

Reserved -- must be coded as 0x00

PROPOSED

PROPOSED

Annex A.5: Module Specific Bytes for Differential Memory Module Types (Bytes 192~447, 0x0C0~0x1BF)

This section defines the encoding of SPD bytes 192~447 when Memory Technology Key Byte 2 contains the value 0x0C and Module Type Key Byte 3 contains any of the following:

- 0xHA, DDIMM
- where H refers to the hybrid memory architecture, if any present on the module

See Annex A.0 for common SPD bytes 192~239 (0x0C0~0EF).

Module Specific SPD Bytes for Differential Module Types		
Byte Number		Function Described
240	0x0F0	Differential Memory Buffer Manufacturer ID Code, First Byte
241	0x0F1	Differential Memory Buffer Manufacturer ID Code, Second Byte
242	0x0F2	Differential Memory Buffer Device Type
243	0x0F3	Differential Memory Buffer Revision Number
246~445	0x0F6~0x1BD	Reserved

(Registered): Module Specific Device Information Bytes 240~243 (0x0F0~0x0F3)

This table lists the SPD byte addresses for the key components on this assembly.

Module Specific Device Information								
Device	Manufacturer ID Code, First Byte		Manufacturer ID Code, Second Byte		Device Type		Device Revision	
	Dec	Hex	Dec	Hex	Dec	Hex	Dec	Hex
Differential Memory Buffer (DMB)	240	0x0F0	241	0x0F1	242	0x0F2	243	0x0F3

Manufacturer ID Code: Per JEP106. See SPD bytes 512~513 for an example.

Device types:

Module Specific Device Types				
	Bit 7	Bit 6	Bits 5 ~ 4	Bits 3 ~ 0
Device	Devices Installed		Reserved	Device Type
Differential Memory Buffer (DMB)	0 = Not installed 1 = Installed	Reserved; must be coded as 0	Reserved. Must be coded as 00	0000: DMB501 (see JESD303-1) All other codes reserved

Device revision: This byte is coded as a major revision in bits 7~4 and minor revision in bits 3~0, each nibble expressed in BCD. For example, device stepping 3.2 would be coded as 0x32.

(Differential): Reserved
Bytes 204~445 (0x0CC~0x1BD)

Reserved -- must be coded as 0x00

PROPOSED

PROPOSED

Annex A.6: Non-Volatile (NVDIMM-N) Hybrid Memory Parameters: (Bytes 192~447, 0x0C0~0x1BF)

This section defines the encoding of SPD bytes 192~447 when Module Type Key Byte 3 contains the following:

- 0x9M, NVDIMM-N
- where M refers to the base memory architecture

NVDIMM types defined at this time are:

NVDIMM-N Persistent DRAM using NAND flash

See Annex A.0 for common SPD bytes 192~239 (0x0C0~0EF).

Module Specific SPD Bytes for NVDIMM-N Module Types		
Byte Number		Function Described
240	0x0F0	Registering Clock Driver Manufacturer ID Code, First Byte
241	0x0F1	Registering Clock Driver Manufacturer ID Code, Second Byte
242	0x0F2	Register Device Type
243	0x0F3	Register Revision Number
244	0x0F4	Data Buffer Manufacturer ID Code, First Byte
245	0x0F5	Data Buffer Manufacturer ID Code, Second Byte
246	0x0F6	Data Buffer Device Type
247	0x0F7	Data Buffer Revision Number
248~445	0x0F8~0x1BD	Reserved

(NVDIMM-N): Module Specific Device Information Bytes 240~247 (0x0F0~0x0F7)

This table lists the SPD byte addresses for the key components on this assembly.

Module Specific Device Information								
Device	Manufacturer ID Code, First Byte		Manufacturer ID Code, Second Byte		Device Type		Device Revision	
	Dec	Hex	Dec	Hex	Dec	Hex	Dec	Hex
Registering Clock Driver (RCD)	240	0x0F0	241	0x0F1	242	0x0F2	243	0x0F3
Data Buffers (DB)	244	0x0F4	245	0x0F5	246	0x0F6	247	0x0F7

Manufacturer ID Code: Per JEP106. See SPD bytes 512~513 for an example.

Device types:

Module Specific Device Types				
	Bit 7	**Bit 6**	**Bits 5 ~ 4**	**Bits 3 ~ 0**
Device	**Devices Installed**		**Reserved**	**Device Type**
Registering Clock Driver (RCD)	0 = Not installed 1 = Installed	Reserved; must be coded as 0	Reserved. Must be coded as 00	0000: DDR5RCD01 (see JESD82-511) All other codes reserved
Data Buffers (DB)	0 = Not installed 1 = Installed			0000: DDR5DB01 (see JESD82-521) All other codes reserved

Device revision: This byte is coded as a major revision in bits 7~4 and minor revision in bits 3~0, each nibble expressed in BCD. For example, device stepping 3.2 would be coded as 0x32.

PROPOSED

(NVDIMM-N): Reserved
Bytes 248~445 (0x0F8~0x1BD)

Reserved -- must be coded as 0x00.

PROPOSED

PROPOSED

Annex A.7: Non-Volatile (NVDIMM-P) Hybrid Memory Parameters: (Bytes 192~447, 0x0C0~0x1BF)

This section defines the encoding of SPD bytes 192~447 when Module Type Key Byte 3 contains the following:

- 0xAM, NVDIMM-P
- where M refers to the base memory architecture

NVDIMM types defined at this time are:

NVDIMM-P Transactional credit based memory module

See Annex A.0 for common SPD bytes 192~239 (0x0C0~0EF).

Module Specific SPD Bytes for NVDIMM-N Module Types		
Byte Number		Function Described
240	0x0F0	Registering Clock Driver Manufacturer ID Code, First Byte
241	0x0F1	Registering Clock Driver Manufacturer ID Code, Second Byte
242	0x0F2	Register Device Type
243	0x0F3	Register Revision Number
244	0x0F4	Data Buffer Manufacturer ID Code, First Byte
245	0x0F5	Data Buffer Manufacturer ID Code, Second Byte
246	0x0F6	Data Buffer Device Type
247	0x0F7	Data Buffer Revision Number
248~445	0x0F8~0x1BD	Reserved

(NVDIMM-P): Module Specific Device Information Bytes 240~247 (0x0F0~0x0F7)

This table lists the SPD byte addresses for the key components on this assembly.

Module Specific Device Information								
Device	Manufacturer ID Code, First Byte		Manufacturer ID Code, Second Byte		Device Type		Device Revision	
	Dec	Hex	Dec	Hex	Dec	Hex	Dec	Hex
Registering Clock Driver (RCD)	240	0x0F0	241	0x0F1	242	0x0F2	243	0x0F3
Data Buffers (DB)	244	0x0F4	245	0x0F5	246	0x0F6	247	0x0F7

Manufacturer ID Code: Per JEP106. See SPD bytes 512~513 for an example.

Device types:

Module Specific Device Types				
	Bit 7	**Bit 6**	**Bits 5 ~ 4**	**Bits 3 ~ 0**
Device	**Devices Installed**		**Reserved**	**Device Type**
Registering Clock Driver (RCD)	0 = Not installed 1 = Installed	Reserved; must be coded as 0	Reserved. Must be coded as 00	0000: DDR5RCD01 (see JESD82-511) All other codes reserved
Data Buffers (DB)	0 = Not installed 1 = Installed			0000: DDR5DB01 (see JESD82-521) All other codes reserved

Device revision: This byte is coded as a major revision in bits 7~4 and minor revision in bits 3~0, each nibble expressed in BCD. For example, device stepping 3.2 would be coded as 0x32.

PROPOSED

(NVDIMM-P): Reserved
Bytes 248~445 (0x0F8~0x1BD)

Reserved -- must be coded as 0x00.

PROPOSED

PROPOSED

1.0 Blocks 8~9: Manufacturing Information: (Bytes 512~639, 0x200~0x27F)

Byte 512 (0x200): Module Manufacturer ID Code, First Byte
Byte 513 (0x201): Module Manufacturer ID Code, Second Byte

This two-byte field indicates the manufacturer of the module, and shall be encoded as follows: the first byte is the number of continuation bytes indicated in JEP-106; the second byte is the last non-zero byte of the manufacturer's ID code, again as indicated in JEP-106.

Byte 513, Bits 7~0	Byte 512, Bit 7	Byte 512, Bits 6~0
Last non-zero byte, Module Manufacturer	**Odd Parity for Byte 512, bits 6~0**	**Number of continuation codes, Module Manufacturer**
See JEP-106		See JEP-106

Examples:

Company	JEP-106		# continuation codes	SPD	
	Bank	Code		Byte 385	Byte 385
Fujitsu	1	04	0	0x80	0x04
US Modular	5	A8	4	0x04	0xA8

Byte 514 (0x202): Module Manufacturing Location

The module manufacturer shall include an identifier that uniquely defines the manufacturing location of the memory module. While the SPD specification will not attempt to present a decode table for manufacturing sites, the individual manufacturer must keep track of manufacturing location and its appropriate decode represented in this byte.

Bytes 515~516 (0x203~0x204): Module Manufacturing Date

The module manufacturer shall include a date code for the module. The JEDEC definitions for bytes 515 and 516 are year and week respectively. These bytes must be represented in Binary Coded Decimal (BCD). For example, week 47 in year 2014 would be coded as 0x14 (0001 0100) in byte 515 and 0x47 (0100 0111) in byte 516.

Bytes 517~520 (0x205~0x208): Module Serial Number

The supplier shall include a unique serial number for the module. The supplier may use whatever decode method desired to maintain a unique serial number for each module.

One method of achieving this is by assigning a byte in the field from 517~520 as a tester ID byte and using the remaining bytes as a sequential serial number. Bytes 512~520 will then result in a nine-byte unique module identifier. Note that part number is not included in this identifier: the supplier may not give the same value for Bytes 517~520 to more than one DIMM even if the DIMMs

PROPOSED

have different part numbers.

Bytes 521~550 (0x209~0x226): Module Part Number

The manufacturer's part number shall be included and is written in ASCII format within these bytes. Unused digits are coded as ASCII blanks (0x20).

Byte 551 (0x227): Module Revision Code

This refers to the module revision code. While the SPD specification will not attempt to define the format for this information, the individual manufacturer may keep track of the revision code and its appropriate decode represented in this byte. This revision code refers to the manufacturer's assembly revision level and may be different than the raw card revision in SPD bytes 128 and 130.

Byte 552 (0x228): DRAM Manufacturer ID Code, First Byte
Byte 553 (0x229): DRAM Manufacturer ID Code, Second Byte

This two-byte field indicates the manufacturer of the DRAM on the module, and shall be encoded as follows: the first byte is the number of continuation bytes indicated in JEP-106; the second byte is the last non-zero byte of the manufacturer's ID code, again as indicated in JEP-106.

Byte 553, Bits 7~0	Byte 552, Bit 7	Byte 552, Bits 6~0
Last non-zero byte, DRAM Manufacturer	**Odd Parity for Byte 552, bits 6~0**	**Number of continuation codes, DRAM Manufacturer**
See JEP-106		See JEP-106

Example: See bytes 512~513 for example manufacturer codes.

Byte 554 (0x22A): DRAM Stepping

This byte defines the vendor die revision level (often called the "stepping") of the DRAMs on the module. This byte is optional. For modules without DRAM stepping information, this byte should be programmed to 0xFF.

Bits 7~0
DRAM Stepping
Programmed in straight Hex format - no conversion needed. 00 - Valid 01 - Valid .. FE - Valid FF - Undefined (No Stepping Number Provided)

Examples:

Code	Meaning
0x00	Stepping 0
0x01	Stepping 1
0x31	Stepping 3.1
0xA3	Stepping A3
0xB1	Stepping B1
0xFF	Stepping information not provided

Bytes 554 (0x22A): Manufacturer's Specific Data

The module manufacturer may include any additional information desired into the module within these locations.

Bytes 638~639 (0x22A): Reserved

Reserved; must be coded as 0x0000.

PROPOSED

1.0 Blocks 10~15: End User Programmable, Bytes 640~1023 (0x280~0x3FF)

These blocks of the SPD are not write protected so that end users may program any values into these bytes during system runtime or for system management.

PROPOSED